Operator's Manual

optris® CTi

LT/ LTfast/ LThot/ G5/ P3/ P7/ 1M/ 2M/ 3M/ 4M

Infrared Industrial Pyrometer

Optris GmbH & Co. KG
Ferdinand-Buisson-Str. 14
13127 Berlin
Germany

Tel.: +49 30 500 197-0
Fax: +49 30 500 197-10

E-mail: info@optris.com
Internet: www.optris.com

optris
infrared measurements

Table of Contents

Table of Contents **3**

1 General Information **8**

1.1 Description 8

1.2 Warranty 9

1.3 Scope of Supply 9

1.4 Maintenance 10

1.4.1 Cleaning 10

1.4.2 Handling 10

1.4.3 Storage 10

1.5 Model Overview 11

1.6 Factory Default Settings 13

2 Technical Data **15**

2.1 General Specifications 15

2.2 Electrical Specifications 16

2.3 Measurement Specifications according to IEC/TS 62492-2 (2013-04) 17

2.3.1 LT/LThot versions 17

2.3.2 LTfast versions 18

2.3.3 G5 / P3 / P7 versions 19

2.3.4 xM versions 20

2.3.5 Measurement conditions applied according to IEC/TS 62492-2 (2013-04) 24

2.4 CF Lens and Protective Window 25

2.5 Optical Charts 27

2.5.1 Standard Focus (SF) 28

2.5.2 Close Focus (CF) 29

2.5.3 Standard Focus + Close Focus (SF + CF) 30

3 Mechanical Installation 31

3.1 Mounting Accessories 34

3.2 Air Purge Collars 36

3.3 Further Accessories 38

4 Electrical Installation 44

4.1 Cable Connections 44

4.1.1 Designation 45

4.1.2 Power supply 46

4.1.3 Cable Assembling 47

4.2 Ground Connection 48

4.3 Exchange of the Sensing Head 48

4.3.1 Entering of the Head ID 49

4.3.2 Sensing Head cable – shortening 50

4.3.3 Measurement uncertainty 50

5 Outputs and Inputs 52

5.1 Analog Outputs 52

5.1.1 Output channels 52

5.2 Digital Interfaces 53

5.3 Relay Outputs 54

5.4 I/O pins 55

5.5 Alarms 56

5.5.1 Visual Alarms 56

5.5.2 Open collector output / AL2: 57

6 Operating 58

6.1 Sensor Setup 58

7 IRmobile app 68

8 Software CompactPlus Connect 70

8.1 Installation 70

8.2 Communication settings 71

8.2.1 Serial Interface 71

8.2.2 Protocol 71

9 Basics of Infrared Thermometry 72

10 Emissivity 73

10.1 Definition 73

10.2 Determination of unknown Emissivity 73

10.3 Characteristic Emissivity 75

Appendix A – Table of Emissivity for metals 76

Appendix B – Table of Emissivity for non-metals 78

Appendix C – Smart Averaging 79

Appendix D – Declaration of Conformity 80

1 General Information

1.1 Description

Thank you for choosing the **optris® CTi** infrared thermometer.
The sensors of the optris CTi series are noncontact infrared temperature sensors.
They calculate the surface temperature based on the emitted infrared energy of objects **[►9 Basics of Infrared Thermometry]**. The sensor housing of the CTi head is made of stainless steel (IP65/ NEMA-4 rating) – the sensor electronics is placed in a separate box made of die casting zinc.

The CTi sensing head is a sensitive optical system. Please use only the thread for mechanical installation.

- Avoid abrupt changes of the ambient temperature.
- Avoid mechanical violence on the head – this may destroy the system (expiry of warranty).
- If you have any problems or questions, please contact our service department.

Read the manual carefully before the initial start-up. The manufacturer reserves the right to change the herein described specifications in case of technical advances of the product.

► All accessories can be ordered according to the referred part numbers in brackets [ ].

1.2 Warranty

Each single product passes through a quality process. Nevertheless, if failures occur, please contact the customer service at once. The warranty period covers 24 months starting on the delivery date. After the warranty is expired the manufacturer guarantees additional 6 months warranty for all repaired or substituted product components. Warranty does not apply to damages, which result from misuse or neglect. The warranty also expires if you open the product. The manufacturer is not liable for consequential damage or in case of a non-intended use of the product.
If a failure occurs during the warranty period the product will be replaced, calibrated or repaired without further charges. The freight costs will be paid by the sender. The manufacturer reserves the right to exchange components of the product instead of repairing it. If the failure results from misuse or neglect the user must pay for the repair. In that case you may ask for a cost estimate beforehand.

All infrared measurement systems from Optris undergo an extensive end-of-line test before delivery. This final quality control ensures that every product meets our strict performance and reliability standards. By rigorously testing each unit, we guarantee accurate and reliable operation in accordance with Optris' specifications.

1.3 Scope of Supply

- CTi sensing head with connection cable and electronic box
- Mounting nut
- 1.5 m USB-C cable with USB-C to USB-A adaptor
- Quick Start Guide

1.4 Maintenance

Never use cleaning compounds which contain solvents (neither for the lens nor for the housing).

1.4.1 Cleaning

Blow off loose particles using clean compressed air. The lens surface can be cleaned with a soft, humid tissue (moistened with water) or a lens cleaner (e.g. Purosol or B+W Lens Cleaner).

1.4.2 Handling

When cleaning the optics of the infrared measurement device, gloves must be worn at all times while handling all lens materials. IG glasses can be toxic and absorbed through the skin. For all IG materials, care should be taken when handling, as these materials are soft and susceptible to scratches.

Do not swallow, inhale, or ingest infrared lens material. In case of fire and/or explosion, do not breathe fumes. Releases toxic selenium oxide and arsenide fumes if heated at high temperatures. Releases toxic hydrogen selenide gas if in contact with acid.

1.4.3 Storage

Infrared pyrometers, and especially the optics, should be stored in a low-humidity environment, and extended exposure to UV light should be avoided to avoid the development of haziness on the surface of the optics. Contact with high temperatures, strong acids, or bases should be avoided.

1.5 Model Overview

The sensors of the CTi series are available in the following basic versions:

Model	Model codes	Measurement range	Spectral response	Typical applications
LT	LT02	-50 to 650 °C	8-14 µm	non-metallic surfaces
	LT15	-50 to 800 °C		
	LT22	-50 to 1050 °C		
LThot	LT02H	-50 to 1050 °C		high ambient temperatures (up to 250 °C)
	LT10H			
LTfast	LT02F	-50 to 600 °C		for fast applications (ms timescale) at low object temperatures
	LT15F	-50 to 1050 °C		
	LT25F			
G5	G5H	100 to 1650 °C	5.0 µm	glass applications
	G5L	50 to 1000 °C		
P3	P3	35 to 600 °C	3.43 µm	thin plastic films like PE, PE and PS
P7	P7	0 to 710 °C	7.9 µm	thin plastic films like PET, PU, PTFE, PA or CTA

Model	Model codes	Measurement range	Spectral response	Typical applications
1M	1MXL	350 to 800 °C	1.0 µm	hot and fast metal applications
	1ML	485 to 1150 °C		
	1MH	650 to 1850°C		
	1MH1	800 to 2200°C		
2M	2MXL	150 to 500 °C	1.6 µm	hot and fast metal applications
	2ML	250 to 900 °C		
	2MH	385 to 1600 °C		
	2MH1	490 to 2000°C		
3M	3MXL	30 to 350°C	2.3 µm	metals at low object temperatures
	3ML	50 to 475°C		
	3MH	100 to 600°C		
	3MH1	150 to 1000°C		
	3MH2	200 to 1500°C		
	3MH3	250 to 1850 °C		
4M	4ML	0 °C to 600 °C	2.2 – 6 µm	low object temperatures (from 0 °C) and very fast processes

1.6 Factory Default Settings

The unit has the following presetting at time of delivery:

Setting	Value
Signal output 1 - object temperature	0 – 10 V
Signal output 2 - Internal head temperature	0 – 10 V
Emissivity	1.000
Transmissivity	1.000
Averaging (AVG)	0.1 s
Smart Averaging	inactive
Peak hold	inactive
Valley hold	inactive
Temperature unit	°C
Ambient temperature compensation (Output at OUT-AMB as 0-5 V signal on LT)	internal head temperature probe
Baud rate	921.6 kBaud (for xM versions) 115 kBaud (for all other versions)

	LT02	LT15	LT22	LT02H	LT10H
Lower limit temperature range [°C]	0			0	
Upper limit temperature range [°C]	500			1000	
Lower alarm limit [°C] (normally closed)	30			30	
Upper alarm limit [°C] (normally open)	100			100	

	G5L	G5H	P3	P7	1MXL	1ML
Lower limit temperature range [°C]	50	100	35	0	350	485
Upper limit temperature range [°C]	1000	1650	600	710	800	1150
Lower alarm limit [°C] (normally closed)	200	250	50	50	450	550
Upper alarm limit [°C] (normally open)	600	800	100	100	600	950

	1MH	1MH1	2MXL	2ML	2MH	2MH1
Lower limit temperature range [°C]	650	800	150	250	385	490
Upper limit temperature range [°C]	1850	2200	500	900	1600	2000
Lower alarm limit [°C] (normally closed)	750	900	200	350	450	550
Upper alarm limit [°C] (normally open)	1200	1600	350	700	900	1200

	3MXL	3ML	3MH	3MH1	3MH2	3MH3	4ML
Lower limit temperature range [°C]	30	50	100	150	200	250	0
Upper limit temperature range [°C]	350	475	600	1000	1500	1850	600
Lower alarm limit [°C] (normally closed)	50	70	150	250	300	350	70
Upper alarm limit [°C] (normally open)	100	100	250	600	800	1000	100

2 Technical Data

2.1 General Specifications

	Sensing head	Electronic box
Environmental rating	IP65 (NEMA-4)	IP65 (NEMA-4)
Operating Temperature	see: Measurement Specifications	-20...85 °C [1)]
Storage temperature	see: Measurement Specifications	-40...85 °C
Relative humidity	10...95 %, non-condensing	
Material	stainless steel	die casting zinc
Dimensions	28 mm x 14 mm (SF Optics) or 32 mm x 14 mm (CF Optics), M12x1	89 mm x 70 mm x 30 mm
	55 mm x 29,5 mm, M18x1 (with massive housing)	
Weight	40 g (205 g with massive housing)	420 g
Cable length	1 m (standard for LT/LTfast versions) 8 m 3 m (standard for all other versions) 15 m	
Cable diameter	2.8 mm	
Ambient temperature cable	max. 180 °C (High temperature cable for CTi LThot: 250 °C)	
Vibration / Shock	IEC 68-2-6: 3G, 11 – 200 Hz, any axis / IEC 68-2-27: 50G, 11 ms, any axis	
Pressure resistance (head)	8 bar	
Software / App (optional)	CompactPlus Connect / IRmobile App	

1) The functionality of the LCD display can be limited at ambient temperatures below 0 °C

2.2 Electrical Specifications

Specification	Values
Power Supply	8-30 VDC / 5 V USB (built-in) / max. 1.2 W
Outputs/ analog	Output 1 and 2 are freely selectable: Analog mA/mV, Alarm mA/mV, TCK selectable: 0/ 4–20 mA, 0–5/ 10 V, thermocouple (type K) or alarm output (Signal source: object temperature) Head temperature as 0–5 V or 0–10 V output or alarm output (Signal source switchable to object temperature or electronic box temperature if used as alarm output)
Alarm output	Open collector output (NPN type) at Pin AL2 [24 V/ 50 mA]
Output impedances mA mV	 max. loop resistance 500 Ω min. 100 kΩ load impedance
Digital interfaces	USB, RS232, RS485, Modbus RTU, Ethernet TCP, Modbus TCP, EtherNet/IP, Profinet, EtherCAT, IO-Link (optional plug-in modules)
Relay outputs	2 x 60 VDC/ 42 VAC_{RMS}, 0.4 A; optically isolated (optional plug-in module)
Functional inputs / I/O Pins	I/O 1-3 pins freely selectable via software

2.3 Measurement Specifications according to IEC/TS 62492-2 (2013-04)

2.3.1 LT/LThot versions

	LT02	LT15	LT22	LT02H	LT10H
Temperature range (scalable)	-50... 650 °C	-50… 800 °C	-50... 1050 °C	-50… 1050 °C	-50… 1050 °C
Operating temperature (head)	-20...120 °C	-20...180 °C		-20...250 °C	-20...250 °C
Storage temperature (head)	-40...120 °C	-40...180 °C		-40...250 °C	-40...250 °C
Spectral range	8 -14 µm				
Optical resolution	2:1	15:1	22:1	2:1	10:1
Measurement uncertainty	±1.0 °C or ± 1.0 %			±1.5 °C or ± 1.0 %	
Repeatability	±0.2 °C or ± 0.1 %	±0.1 °C or ± 0.1 %	±0.15 °C or ± 0.1 %	±0.13 °C or ± 0.1 %	±0.16 °C or ± 0.1 %
Short-term stability (typically)	0.13 K/h	0.08 K/h	0.08 K/h	0.24 K/h	0.3 K/h
Temperature coefficient	±0.05 K/ K or ±0.02 %/ K	±0.05 K/ K	±0.05 K/ K	±0.1 K/ K	±0.04 K/ K
NETD (typically)	25 mK	25 mK	35 mK	37 mK	45 mK
Response time (90 % signal)	40 ms	115 ms	115 ms	45 ms	40 ms
Exposure time (90 % signal)	40 ms	115 ms	115 ms	45 ms	40 ms
Warm-up time	10 min				
Emissivity/ Gain	0.050...1.100 (adjustable via programming keys or software)				
Transmissivity	0.050...1.100 (adjustable via programming keys or software)				
Signal processing	Average, peak hold, valley hold (adjustable via programming keys or software)				

2.3.2 LTfast versions

	LT02F	LF15F	LF25F
Temperature range (scalable)	-50…+600 °C	-50…+1050 °C	
Operating temperature (head)	-20…+125 °C		
Storage temperature (head)	-40…+125 °C		
Spectral range	8 – 14 µm		
Optical resolution	2:1	15:1	25:1
Measurement uncertainty	± 2.0 °C or ± 1 %	± 2.0 °C or ± 1 %	± 2.0 °C or ± 1 %
Repeatability	± 0.11 K	± 0.22 K	± 0.55 K
Short-term stability (typically)	0.07 K/h	0.12 K/h	0.25 K/h
Temperature coefficient	± 0.05 K/K		
NETD (typically)	40 mK	75 mK	180 mK
Response time (90 % signal)	30 ms	9 ms	6 ms
Exposure time (90 % signal)	30 ms	9 ms	6 ms
Warm-up time	10 min		
Emissivity/ Gain	0.050...1.100 (adjustable via programming keys or software)		
Transmissivity	0.050...1.100 (adjustable via programming keys or software)		
Signal processing	Average, peak hold, valley hold (adjustable via programming keys or software)		

2.3.3 G5 / P3 / P7 versions

	G5L	G5H	P3	P7
Temperature range (scalable)	50…1000 °C	100…1650 °C	35…600 °C	0…710 °C
Operating temperature (head)	-20… 85 °C			
Storage temperature (head)	-40… 85 °C			
Spectral range	5.0 µm		3.43 µm	7.9 µm
Optical resolution	14:1	20:1	15:1	10:1
Measurement uncertainty	± (1 % of reading + 1.5 °C)		± (1 % of reading + 2.5 °C)	± 1.5 °C or ± 1 %
Repeatability	± 0.2 °C or ± 0.2 %	± 0.5 °C or ± 0.2 %	± 0.25 K	± 0.22 K
Short-term stability (typically)	0.9 K/h	1.0 K/h	0.15 K/h	0.4 K/h
Temperature coefficient	± (0.1 K/K or 0.02 %/K)	± (0.1 K/K or 0.02 %/K)	± 0.1 K/K	± 0.15 K/K
NETD (typically)	60 mK	80 mK	90 mK	45 mK
Response time (90 % signal)	90 ms	70 ms	15 ms	150 ms
Exposure time (90 % signal)	90 ms	70 ms	15 ms	150 ms
Warm-up time	10 min			
Emissivity/ Gain	0.050...1.100 (adjustable via programming keys or software)			
Transmissivity	0.050...1.100 (adjustable via programming keys or software)			
Signal processing	Average, peak hold, valley hold (adjustable via programming keys or software)			

2.3.4 xM versions

	1MXL	1ML	1MH	1MH1
Temperature range (scalable)	350…800 °C	485…1150 °C	650…1850°C	800…2200°C
Operating temperature (head)	-20… 125 °C			
Storage temperature (head)	-40… 125 °C			
Spectral range	1.0 µm			
Optical resolution	15:1	40:1	75:1	75:1
Measurement uncertainty	± 2.0 °C	± (1.5 °C + 0.3 % of reading)	± (1.5 °C + 0.3 % of reading)	± (2.0 °C + 0.3 % of reading)
Repeatability	± 1.4 K	± 1.0 K	± 0.5 K	± 0.5 K
Short-term stability (typically)	0.3 K/h	0.06 K/h	0.11 K/h	0.11 K/h
Temperature coefficient	± 0.1 K/K	± 0.1 K/K	± 0.15 K/K	± 0.15 K/K
NETD (typically)	600 mK	330 mK	220 mK	160 mK
Response time (90 % signal)	320 µs			
Exposure time (90 % signal)	110 µs			
Warm-up time	None			
Emissivity/ Gain	0.050...1.100 (adjustable via programming keys or software)			
Transmissivity	0.050...1.100 (adjustable via programming keys or software)			
Signal processing	Average, peak hold, valley hold (adjustable via programming keys or software)			

	2MXL	2ML	2MH	2MH1
Temperature range (scalable)	150…500 °C	250…900 °C	385…1600 °C	490…2000°C
Operating temperature (head)	-20…125 °C			
Storage temperature (head)	-40…125 °C			
Spectral range	1.6 µm			
Optical resolution	15:1	40:1	75:1	75:1
Measurement uncertainty	± 1.5 °C	± (1.5 °C + 0.3 % of reading)	± (1,5 °C + 0.3 % of reading)	± (1,5 °C + 0.3 % of reading)
Repeatability	± 0.25 K	± 0.35 K	± 0.25 K	± 0.25 K
Short-term stability (typically)	0.05 K/h	0.05 K/h	0.1 K/h	0.1 K/h
Temperature coefficient	± 0.05 K/K	± 0.12 K/K	± 0.12 K/K	± 0.20 K/K
NETD (typically)	110 mK	175 mK	105 mK	52 mK
Response time (90 % signal)	320 µs			
Exposure time (90 % signal)	110 µs			
Warm-up time	None			
Emissivity/ Gain	0.050...1.100 (adjustable via programming keys or software)			
Transmissivity	0.050...1.100 (adjustable via programming keys or software)			
Signal processing	Average, peak hold, valley hold (adjustable via programming keys or software)			

	3MXL	3ML	3MH
Temperature range (scalable)	30 ... 350°C	50... 475°C	100... 600°C
Operating temperature (head)	-20 °C … 85 °C		
Storage temperature (head)	-40 °C … 125 °C		
Spectral range	2.3 µm		
Optical resolution	12:1	22:1	33:1
Measurement uncertainty	± 1.5 °C		
Repeatability	± 0.25 K		
Short-term stability (typically)	0.10 K/h	0.09 K/h	0.13 K/h
Temperature coefficient	±0.08 K/ K	±0.08 K/ K	±0.05 K/ K
NETD (typically)	85 mK	95 mK	105 mK
Response time (90 % signal)	320 µs		
Exposure time (90 % signal)	110 µs		
Warm-up time	None		
Emissivity/ Gain	0.050...1.100 (adjustable via programming keys or software)		
Transmissivity	0.050...1.100 (adjustable via programming keys or software)		
Signal processing	Average, peak hold, valley hold (adjustable via programming keys or software)		

	3MH1	3MH2	3MH3	4ML
Temperature range (scalable)	150…1000°C	200…1500 °C	250…1850 °C	0…600 °C
Operating temperature (head)	-20…+85 °C			-20…+70 °C
Storage temperature (head)	-40…+125 °C			-40…+85 °C
Spectral range	2.3 µm			2.0 … 6.0 µm
Optical resolution	75:1			10:1
Measurement uncertainty	± (0.3 % of reading + 1.5 °C)			± (0.3 % of reading + 2.0 °C)
Repeatability	± 0.6 K	± 0.25 K	± 0.25 K	± 0.16 K
Short-term stability (typically)	0.25 K/h			0.05 K/h
Temperature coefficient	± 0.08 K/K	± 0.1 K/K	± 0.1 K/K	± (0.05 K/K or 0.03 %/K)
NETD (typically)	200 mK	95 mK	70 mK	70 mK
Response time (90 % signal)	320 µs			
Warm-up time	110 µs			
Emissivity/ Gain	None			
Transmissivity	0.050...1.100 (adjustable via programming keys or software)			
Signal processing	0.050...1.100 (adjustable via programming keys or software)			
Temperature range (scalable)	Average, peak hold, valley hold (adjustable via programming keys or software)			

2.3.5 Measurement conditions applied according to IEC/TS 62492-2 (2013-04)

1) The LCD display capacity may be limited at ambient temperatures below 0 °C
2) whichever is greater
3) Response time = 1 s (90%)
4) Response time = 200 ms (90%)
5) Response time = 100 ms (90%)
6) Response time = 1 ms (90%)
7) ε = 1.000
8) T_{obj} > 0 °C
9) T_{obj} > T_{head} + 10 °C
10) T_{obj} = T_{min} + 50 °C
11) T_{obj} = 25 °C
12) T_{obj} = 50 °C
13) T_{obj} = 100 °C
14) at ambient temp. (23 ± 5) °C
15) specifications are valid for temperatures above 50 °C

	1M / 2M	3M	4M	LT/LThot	LTfast	G5	P3	P7
operating temperature	1	1	1	1	1	1	1	1
measurement uncertainty	4,7,14	2,4,7,14	2,4,7,14	2,4,7,8	2,5,7,8,14	3,7,14	2,3,7,14,15	2,3,7,14
repeatability	6,7,10,14	6,7,10,14	6,7,10,14	2,4,7,8,14	5,7,11,14	2,4,7,14	5,7,13,14	4,7,12,14
short-term stability	4,7,10	4,7,10	4,7,10	4,7,13,14	7,8,11	4,7,10,14	3,7,13	4,7,12,14
temperature coefficient	4,7	4,7	2,4,7	2,7	2,7,8	2,7	7,9,15	3,7
NETD	6,7,10,14	6,7,10,14	6,7,10,14	4,7,11,14	5,7,11,14	4,7,10,14	5,7,13,14	4,7,12,14

On the CTi LT(hot) und G5 models the head cable must not be moved during the measurement.

2.4 CF Lens and Protective Window

The optional Close Focus (CF) lens enables precise temperature measurement of very small objects and is available for various sensing heads. The minimum achievable spot size depends on the specific sensing head in use. Measurement distance is defined from the front edge of the CF lens holder or the laminar air purge collar. Likewise, protective windows are available.

The CF lens or protective window is simply screwed on the sensing head until it reaches the mechanical end stop. To combine with the massive housing, please use the version with external thread.

Model	CF lens	CF lens with external thread	Air purge with CF lens	Protective window	Protective window with external thread
LT/G5	ACCTCF	ACCTCFE	ACCTAPLCF	ACCTPW	ACCTPWE
1M/ 2M/ 3M	ACCTCFHT	ACCTCFHTE	ACCTAPLCFHT	ACCTPWHT	ACCTPWHTE
4M	-	-	-	ACCTPWSI35M	ACCTPWSI35ME
P3	ACCTCFP3	ACCTCFP3E	-	-	-

Typical Transmission values of the CF lens (*deviations possible)		
Model	CF lens	Protective window
LT	0.78	0.83
1M/ 2M/ 3M	0.92	0.93
4M	-	0.92
P3	tbd	-

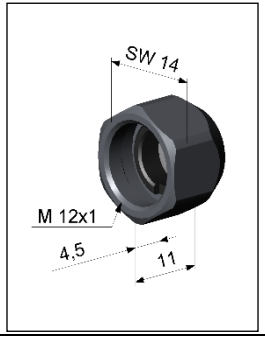

Figure 1: dimensions of CF lens and protective window

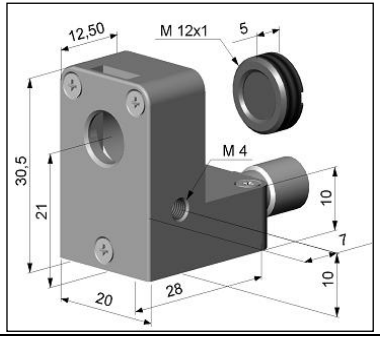

Figure 2: dimensions of laminar air purge with integrated CF lens

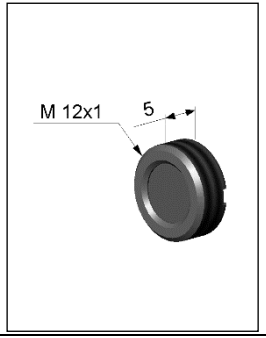

Figure 3: CF lens / protective window with external thread

2.5 Optical Charts

The following optical charts show the diameter of the measuring spot in dependence on the distance between measuring object and sensing head. The spot size refers to **90 % of the radiation energy**.
The distance is always measured from the front edge of the sensing head.

As an alternative to the optical diagrams, the spot size calculator can also be used on the Optris website or via the Optris calculator app. The app can be downloaded for free from the Google Play store (see QR code).

D = Distance from front of the sensing head to the object

S = Spot size

The size of the measuring object and the optical resolution of the infrared thermometer determine the maximum distance between sensing head and measuring object.
To prevent measuring errors the object should fill out the field of view of the optics completely. Consequently, the spot should at all times have at least **the same size** as the object or be **smaller**.

2.5.1 Standard Focus (SF)

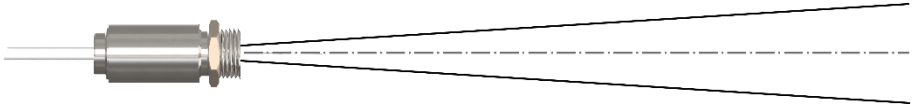

Device	D:S	Optical values											
		0	**100**	**200**	**300**	**400**	**500**	**600**	**700**	**800**	**900**	**1000**	Distance (mm)
LT02(H/F)	2:1	6.5	54.9	103.3	151.6	200	251.6	303.3	354.9	406.8	458.1	509.8	Spotsize (mm)
LT10hot/4M/P7	10:1	6.5	14.9	23.3	31.6	40	51.6	63.3	74.9	86.5	98.1	109.8	Spotsize (mm)
3MXL	12:1	6.5	13.2	19.9	26.6	33.3	43.3	53.3	63.2	73.2	83.1	93.1	Spotsize (mm)
G5L	14:1	6.5	12.0	17.5	23.1	28.6	37.3	46.1	54.9	63.6	72.4	81.2	Spotsize (mm)
*)	15:1	6.5	11.5	16.6	21.6	26.7	35.0	43.3	51.5	59.8	68.1	76.4	Spotsize (mm)
G5H	20 :1	6.5	9.9	13.3	16.6	20.0	26.6	33.3	39.9	46.5	53.1	59.8	Spotsize (mm)

*) LT15(F)/P3/1MXL/2MXL

Device	D:S	Optical values												
		0	**100**	**200**	**300**	**400**	**500**	**600**	**700**	**800**	**900**	**1000**	**1100**	**Distance (mm)**
3ML/LT22	22:1	6.5	10.5	14.4	18.4	22.3	26.3	30.2	34.2	38.1	42.1	46.0	50.0	Spotsize (mm)
LT25F	25:1	6.5	14.9	23.3	31.6	40.0	51.6	63.3	74.9	86.5	98.1	109.8	121.4	Spotsize (mm)

Device	D:S	Optical values											
		0	**200**	**400**	**600**	**800**	**1000**	**1200**	**1400**	**1600**	**1800**	**2000**	**Distance (mm)**
3MH	33:1	6.5	11.8	17	22.3	27.5	32.8	38.1	43.3	48.5	53.8	60.3	Spotsize (mm)
1ML/2ML	40:1	6.5	10.7	14.9	19.1	23.3	27.4	31.6	35.8	40.0	45.8	51.6	Spotsize (mm)
1MH/1MH1/2MH/2MH1 3MH1/3MH2/3MH3	75:1	6.5	8.4	10.2	12.1	13.9	15.8	17.6	19.5	21.3	24.8	28.3	Spotsize (mm)

2.5.2 Close Focus (CF)

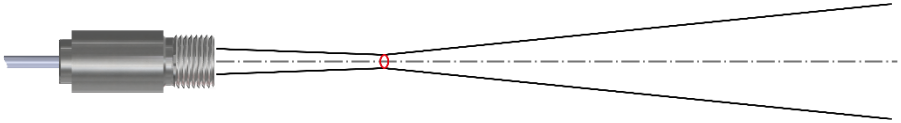

Device	D:S	Optical values										
		0	**15**	**30**	**50**	**75**	**100**	**125**	**150**	**175**	**200**	**Distance (mm)**
LT10hot CF1	10:1	6.5	4.8	**3**	9.3	17.3	25.2	33.1	41.8	48.9	56.8	Spotsize (mm)
3MXL CF1	12:1	6.5	4.5	**2.5**	8.5	16.0	23.5	31.0	38.5	46.0	53.5	Spotsize (mm)
3ML CF1	22:1	6.5	3.9	**1.4**	6.6	13.2	19.7	26.3	32.8	39.4	45.9	Spotsize (mm)
3MH CF1	33:1	6.5	3.8	**1**	6	12.3	18.5	24.8	31	37.3	43.5	Spotsize (mm)

Device	D:S	Optical values											
		0	**25**	**40**	**50**	**60**	**75**	**100**	**125**	**150**	**175**	**200**	**Distance (mm)**
4M CF	10:1	6.5	5.8	5.3	**5.0**	7.3	10.8	16.5	22.3	28.0	33.8	39.5	Spotsize (mm)
LT15 CF	15:1	6.5	4.9	4.0	**3.4**	5.4	8.4	13.3	18.3	23.2	28.2	33.1	Spotsize (mm)
LT22 CF	22:1	6.5	4.4	3.1	**2.3**	4.0	6.7	11.1	15.5	19.9	24.3	28.7	Spotsize (mm)

Device	D:S	Optical values										
		0	**40**	**80**	**110**	**150**	**200**	**250**	**300**	**350**	**400**	**Distance (mm)**
3MXL CF	12:1	6.5	7.5	8.4	**9.2**	14.9	22.0	29.1	36.2	43.3	50.5	Spotsize (mm)
1MXL/2MXL CF	15:1	6.5	6.8	7.1	**7.3**	12.4	18.7	24.9	31.2	37.5	43.8	Spotsize (mm)
3ML CF	22:1	6.5	6.0	5.4	**5.0**	9.2	14.4	19.6	24.9	30.1	35.3	Spotsize (mm)
3MH CF	33:1	6.5	5.3	4.2	**3.3**	6.9	11.4	15.8	20.3	24.8	29.3	Spotsize (mm)
1ML/2ML CF	40:1	6.5	5.1	3.7	**2.7**	6.0	10.2	14.4	18.5	22.7	26.9	Spotsize (mm)
1MH/1MH1/2MH/2MH1 3MH1/3MH2/3MH3 CF	75:1	6.5	4.7	2.8	**1.5**	4.4	8.0	11.6	15.2	18.8	22.5	Spotsize (mm)

2.5.3 Standard Focus + Close Focus (SF + CF)

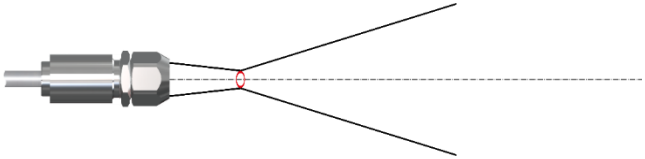

Device	D:S [1)]		Optical values									
		0	**5**	**10**	**20**	**23**	**30**	**35**	**40**	**50**	**60**	**Distance (mm)**
LT02	2.5:1	7.0	6.0	5.0	3.1	**2.5**	5.4	7.5	9.5	13.7	17.8	Spotsize (mm)
LT15/P3	1.5:1	7.0	3.9	**0.8**	8.6	10.9	16.4	20.3	24.2	32.0	39.8	Spotsize (mm)
LT22	2.2:1	7.0	3.8	**0.6**	8.2	10.5	15.8	19.6	23.4	31.0	38.6	Spotsize (mm)
LT25F**	1.6:1	6.5	2.5	**2.3**	11.0	13.6	19.8	24.1	28.5	37.3	46.0	Spotsize (mm)

*if the laminar air purge is used, the distance will reduce by 2 mm
** 0.5 mm @ 8 mm

3 Mechanical Installation

The CTi sensing heads are equipped with a metrical M12x1-thread and can be installed either directly via the sensor thread or with help of the hex nut (included in scope of supply) to the mounting bracket available. Various mounting brackets, which make the adjustment of the sensing head easier, can be additionally ordered as accessories.

All accessories can be ordered using the according part numbers in brackets [ ].

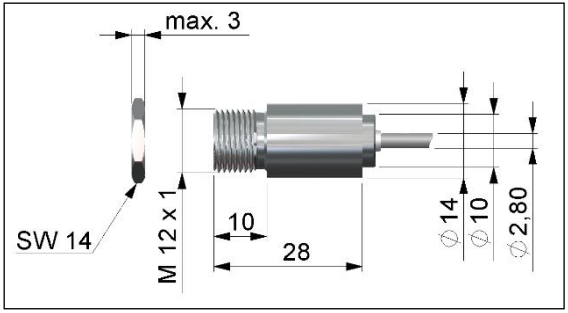

Figure 4: dimensions of sensing head SF for all devices and CF 3MXL

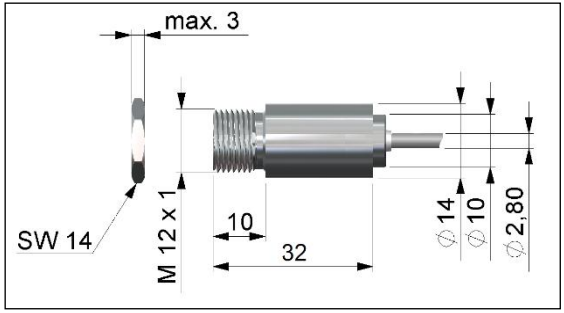

Figure 5: dimensions of sensing head CF/CF1 (except for CF 3MXL)

All CTi LThot, P3, and P7 sensors are equipped with the massive housing and can be installed via the M18x1-thread.

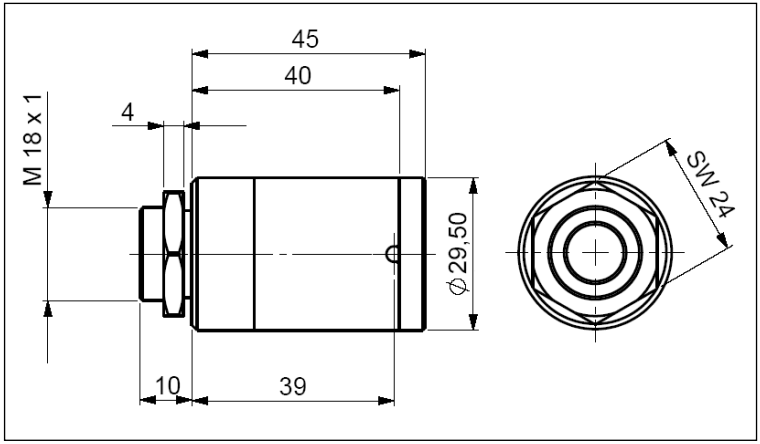

Figure 6 Massive housing, standard for CTi LThot and P3/P7.

Always keep the optical path clear of any objects.

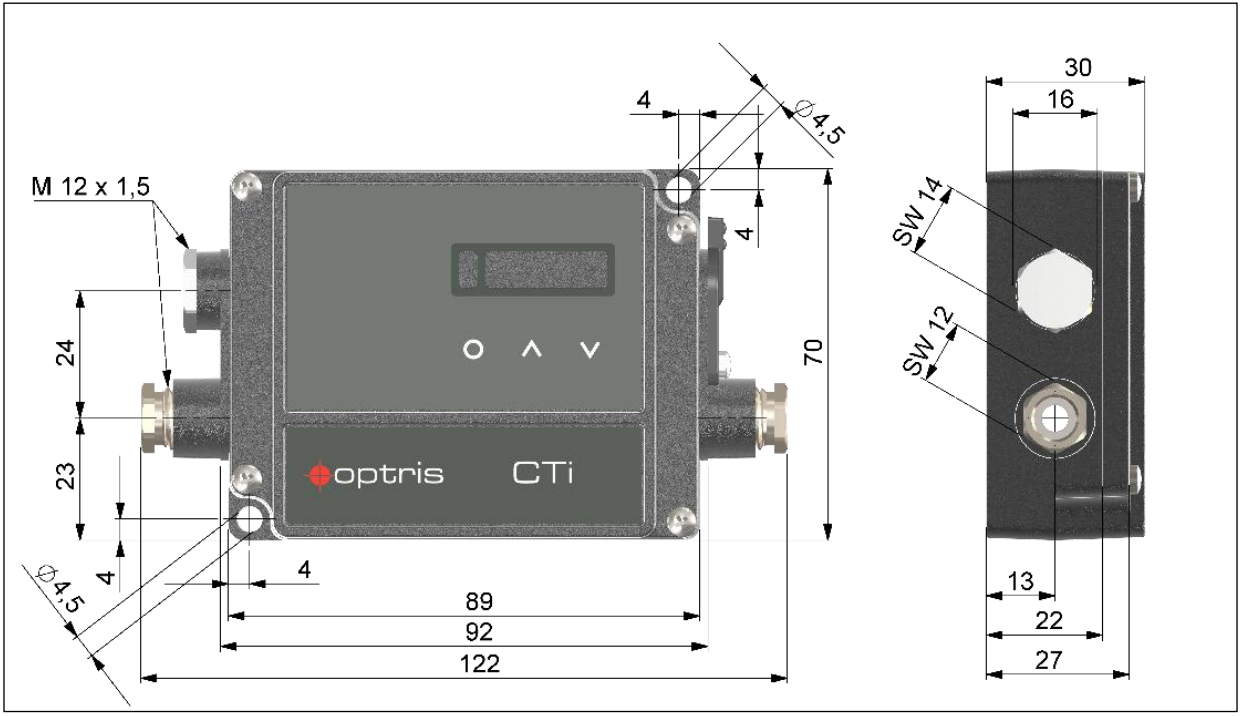

Electronic box

The electronic box is also available with closed cover (display and programming keys with no access from outside) [ACCTCOV].

3.1 Mounting Accessories

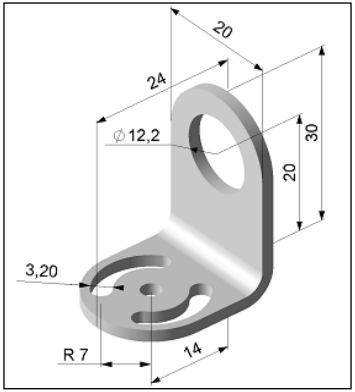

Mounting bracket, adjustable in one axis [ACCTFB]

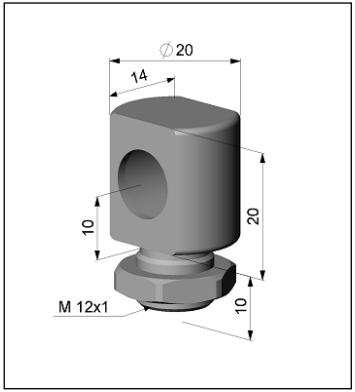

Mounting bolt with M12x1 thread, adjustable in one axis [ACCTMB]

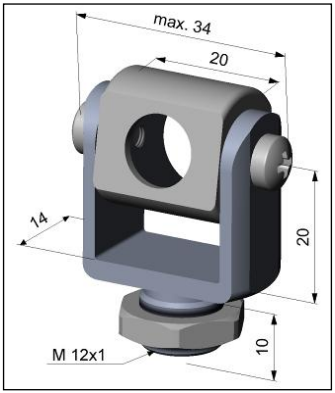

Mounting fork with M12x1 thread, adjustable in 2 axes [ACCTMG]

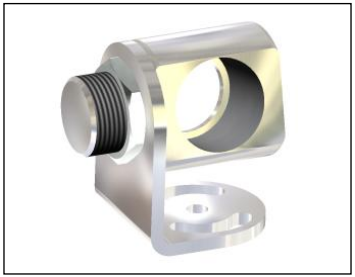

Mounting bracket, adjustable in two axes [ACCTAB] consisting of ACCTFB and ACCTMB

The Mounting fork can be combined with the Mounting bracket [ACCTFB] using the M12x1 thread.

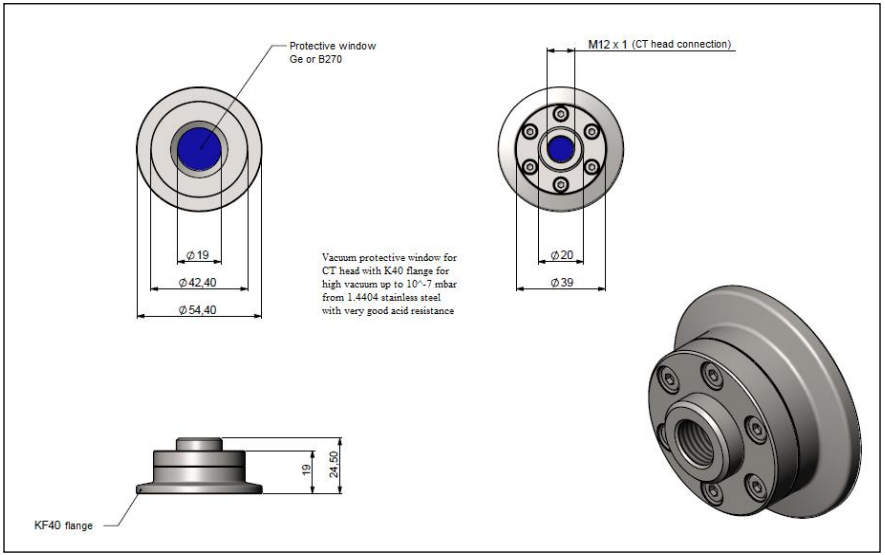

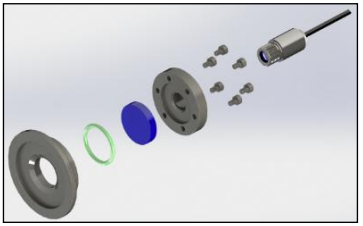

K40 flange [ACCTKF40GE] for CTi LT with Ge window

- When changing the windows, the screws must be tightened with a tightening torque of 1 Nm.
- Transmission: Ge ≈ 0,91 and B270 ≈ 0,92 (Deviations possible)

3.2 Air Purge Collars

The lens must remain free of dust, smoke, fumes, and other contaminants at all times. Any buildup on the optical surface can lead to measurement errors or signal degradation. These effects can be reduced by using an air purge collar. Make sure to use oil-free, technically clean air only.

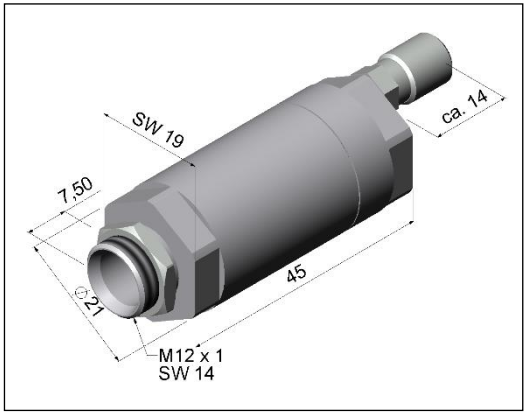

Standard air purge collar [ACCTAP] for optics with a D:S ≥ 10:1 (not for sensing heads with 32 mm length), fits to the mounting bracket
Hose connection: 3x5 mm
Thread (fitting): M5

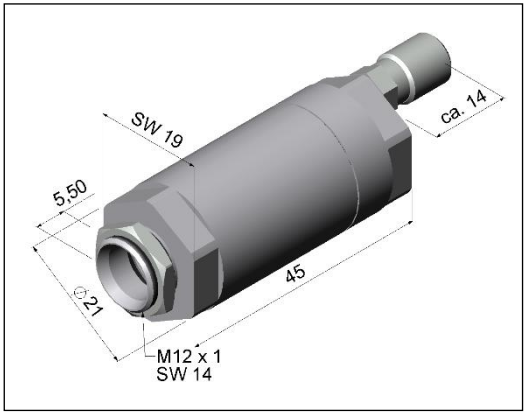

Standard air purge collar [ACCTAP2] for optics with a D:S ≤ 2:1 (not for sensing heads with 32 mm length), fits to the mounting bracket
Hose connection: 3x5 mm
Thread (fitting): M5

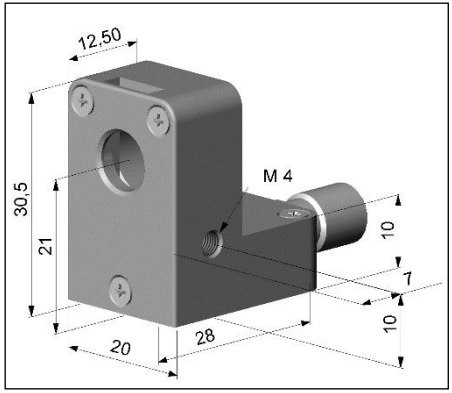

Laminar air purge collar [ACCTAPL]
The sideward air outlet prevents a cooling down of the object in short distances.
Hose connection: 3x5 mm
Thread (fitting): M5

Laminar air purge collar with mounting fork [ACCTAPLMF], adjustable in 2 axes

- The required amount of air (approx. 2...10 l/ min., max. 8 bar) depends on the application and the installation conditions on-site.
- The maximum ambient temperature of **[ACCTAPL]** is 150°C.

3.3 Further Accessories

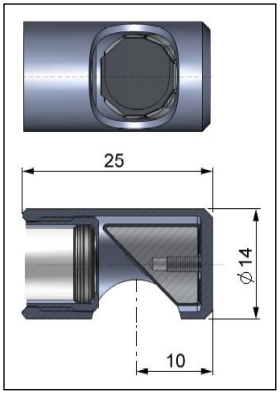

Right Angle Mirror [ACCTRAM]
for optics with a D:S ≥ 10:1;
enables measurements with 90° angle to sensor axis.

The mirror has a reflexion of 96% in combination with a LT22 and LT15 head. If the mirror is used this value has to be multiplied by the emissivity value of the measurement object.

Example: LT22 and object with emissivity = 0,85
0,85 x 0,96 = 0,816
Thus, the emissivity in the CTi must be set to the resulting value of 0,816.

Laser-Sighting tool [D08ACCTLST]
battery powered (2x Alkaline AA), for alignment of CTi sensing heads. The laser head has the same mechanical dimensions as the CTi sensing head.

<u>WARNING:</u> Do not direct the laser beam towards the eyes of humans or animals! Do not stare into the laser beam. Avoid indirect exposure via reflective surfaces!

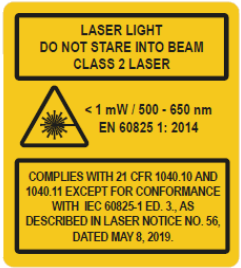

OEM-Laser-Sighting tool

The OEM-Laser-Sighting tool is available with 3,5 m **[ACCTOEMLST]** and 8 m connection cable **[ACCTOEMLSTCB8]**. The laser can be connected to the pins **3V SW** or **PINK** and **GND [►4 Electrical Installation]** and switched on and off via the programming keys or via the software.

The special double-hole mounting bracket **[ACCTFB2]** allows a simultaneous mounting of the CTi sensing head and the laser head.

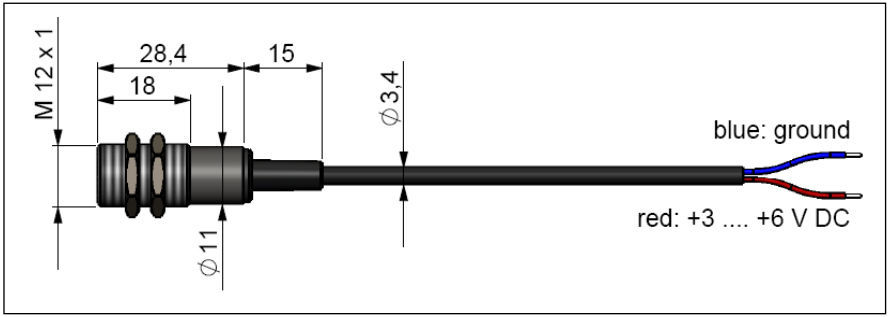

OEM-Laser-Sighting tool [ACCTOEMLST or ACCTOEMLSTCB8]

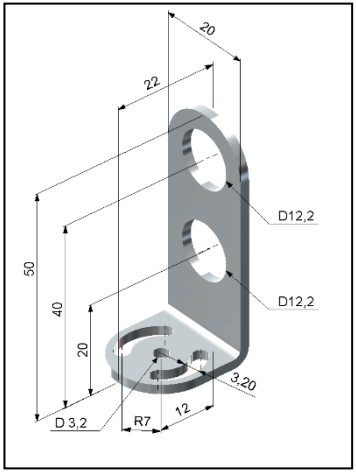

Mounting bracket [ACCTFB2]

Massive Housing

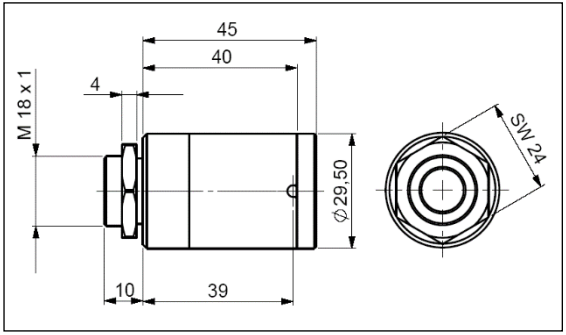

Massive housing, stainless steel [D06ACCTMHS] – also available in aluminum (anodized) or brass

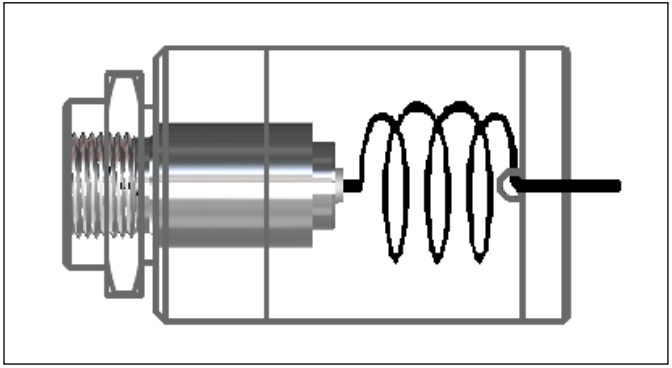

The massive housing allows reproducible and stable measurements on applications with significant and short-term variations in ambient temperatures. It can be combined with the CF lens **[ACCTCFE]** or with the protective window **[ACCTPWE]**.

IMPORTANT: For an optimum function of the massive housing 10 cm of the head cable must be installed in loops inside the housing.

Accessories for Massive Housing

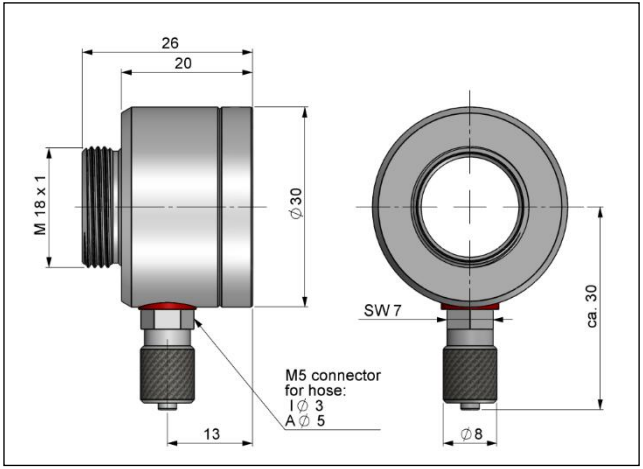

Air purge collar for massive housing (thread M18x1) [ACCTAPMH]

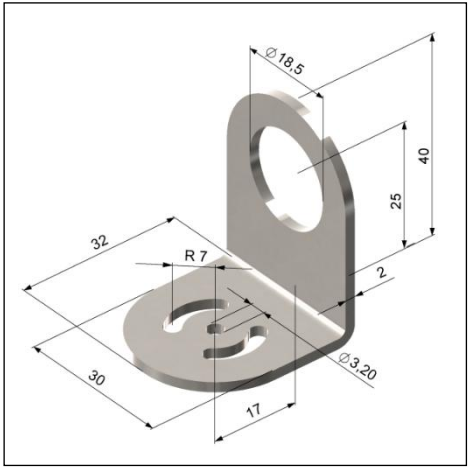

Mounting bracket for massive housing, adjustable in one axis [ACCTFBMH]

The required amount of air (approx. 2...10 l/ min., max. 8 bar) depends on the application and the installation conditions on-site.

Pipe Adapter and Sighting Tubes

The pipe adapter **[ACCTPA]** allows an assembling of sighting tubes directly on the CTi head. The sighting tubes are available in 3 different lengths:

ACCTST20 20 mm
ACCTST40 40 mm
ACCTST88 88 mm

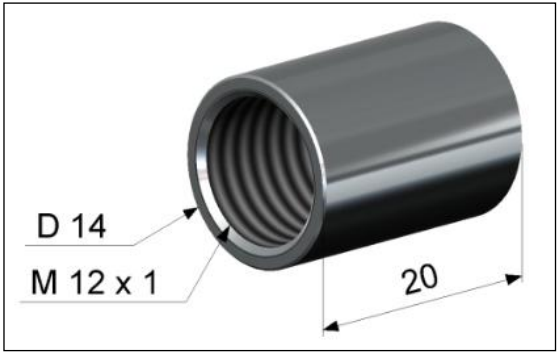

Pipe adapter [ACCTPA]

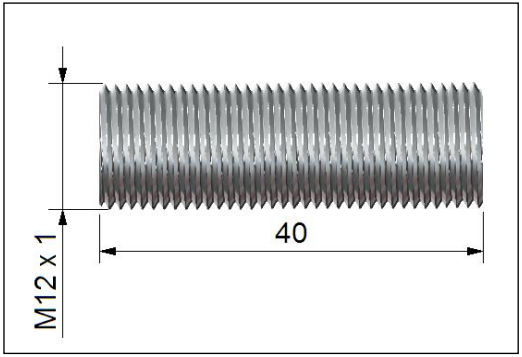

Sighting tube [ACCTST40]

The sighting tubes can only be used for sensing heads with a distance-to-spot ratio (D:S) of ≥ 15:1.

Rail Mount Adapter for Electronic box

With the rail mount adapter, the CTi electronics can be mounted easily on a DIN rail (TS35) according EN50022.

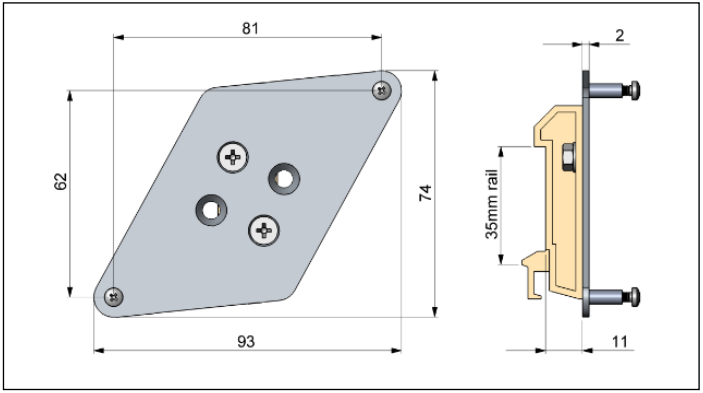

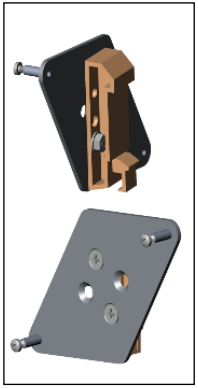

Rail Mount Adapter [ACCTRAIL]

Tilt Assembly for CTi heads

With this mounting accessory a fine adjustment of the CTi head with an off-axis angle +/- 6.5° is possible.

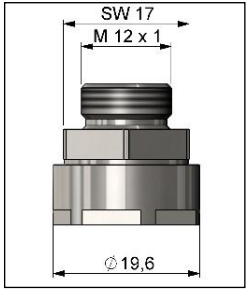

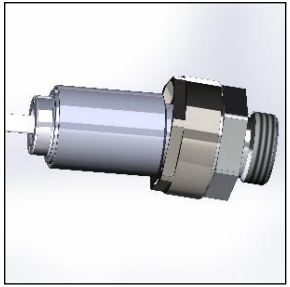

Tilt assembly [ACCTTAS]

4 Electrical Installation

4.1 Cable Connections

For the electrical installation of the CTi please open at first the cover of the electronic box (4 screws). Below the display are the screw terminals for the cable connection.

The CTi series can be split into the following groups:

- Green electronic board: LT, LThot, LTex, and G5
- Blue electronic board: LTfast, P3, P7, and xM

Green electronic board for LT, LThot, LTex, and G5

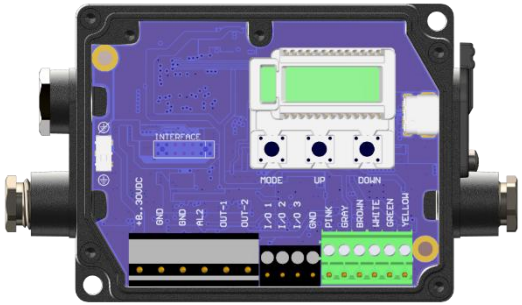

Blue electronic board for LTfast, P3, P7, and xM

4.1.1 Designation

+8…30 VDC	**Power supply**
GND	**Ground (0 V) of power supply**
GND	**Ground (0 V) of internal in- and outputs**
AL2	**Alarm 2 (Open collector output)**
OUT-1	**Analog output mA, mV, TCK**
OUT-2	**Analog output mA, mV, TCK**
I/O1-I/O3	**In- and outputs**
GND	**Ground (0 V)**
Pink	**3 VDC, switchable, for laser-sighting tool**
GRAY - YELLOW	**Sensing head cable**

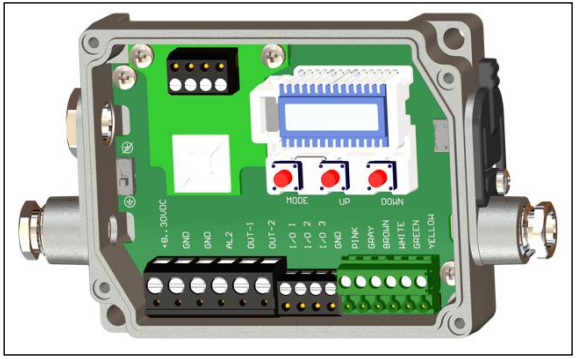

Opened electronic box with terminal connections

The supplied USB cable can be connected to the side of the electronics box. The device can be operated directly via the CompactPlus Connect software or the IRmobile app.

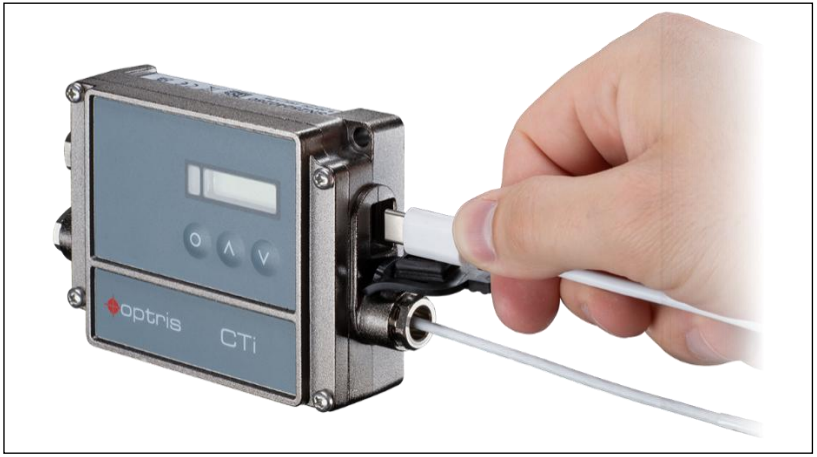

The USB socket on the side is only intended for setup and service and not for continuous use.

4.1.2 Power supply

Please use a stabilized power supply unit with an output voltage in the range of **8–30 VDC** which can supply **1.2 W**. The ripple should be max. **200 mV**.

4.1.3 Cable Assembling

The cable gland M12x1,5 allows the use of cables with a diameter of 3 to 5 mm.
Remove the isolation from the cable (40 mm power supply, 50 mm signal outputs, 60 mm functional inputs). Cut the shield down to approximately 5 mm and spread the strands out. Extract about 4 mm of the wire isolation and tin the wire ends.
Place the pressing screw, the rubber washer and the metal washers of the cable gland one after the other onto the prepared cable end. Spread the strands and fix the shield between two of the metal washers. Insert the cable into the cable gland until the limit stop. Screw the cap tight.
Every single wire may be connected to the according screw clamps according to their colors.

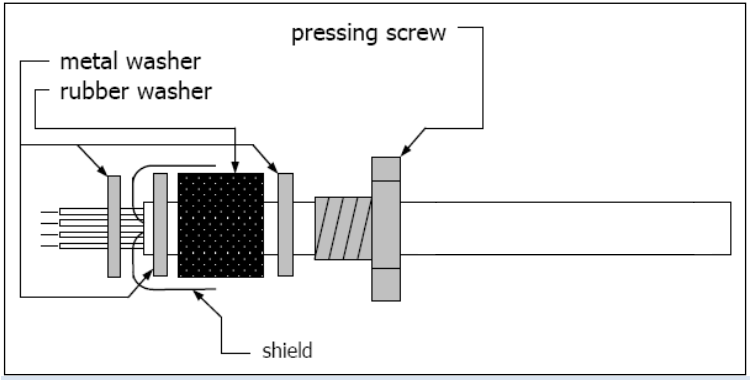

Use shielded cables only. The sensor shield must be grounded.

4.2 Ground Connection

On the left side of the mainboard PCB, you will find a black switch which connects factory-default the ground connections (GND power supply/ outputs) with the ground of the electronics housing.

To avoid ground loops and related signal interferences in industrial environments it might be necessary to interrupt this connection. For this purpose, the switch must be changed.

4.3 Exchange of the Sensing Head

From factory side the sensing head has already been connected to the electronics and the Head ID with its unique calibration data has been entered. Within a certain model group any exchange of sensing heads and electronics is possible. The devices split into the following groups:

- 4-wire head cable: LT, LThot, LTex, and G5
- 5-wire head cable: LTfast, P3, P7, and xM

After exchanging a sensing head, the head ID of the new head must be entered into the electronics.

4.3.1 Entering of the Head ID

Every sensing head has a specific Head ID with its calibration data. The Head ID has a unique database association with the actual calibration data. An internet connection and our software (CompactPlus Connect or IRmobile) are mandatory to download the calibration data from our server. For a correct temperature measurement and functionality of the sensor this Head ID must be stored into the electronic box.

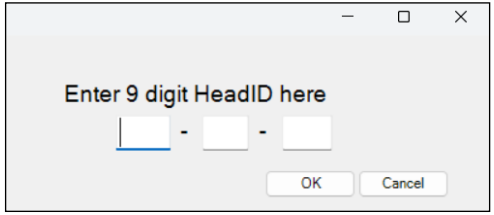

The Head ID consists of **3 blocks** with 3 **characters** each.

The entering of a new Head ID via the CompactPlus Connect software: Go to **Device** and **HeadID change** and enter the 9 digits of the cable in the fields.

You will find the Head ID on a label fixed on the head cable (near the electronics). Please do not remove this label or make sure the Head ID is noted anywhere. The Head ID is needed if the electronics must be exchanged or in case of a necessary recalibration of the sensor.

After you have modified the Head ID a reset is necessary to activate the change.
[►**6 Operating**]

4.3.2 Sensing Head cable – shortening

There is the possibility to change different sensing heads and different cable length. The sensing head cable can be shortened if necessary.
Shortening of the head cable will cause an additional measuring error of about 0.1 K/ m.

4.3.3 Measurement uncertainty

The measurement uncertainty increases with head exchange. Please refer to 2.3.5 for the Measurement conditions applied according to IEC/TS 62492-2 (2013-04).

Device	Uncertainty w/o head exchange	Uncertainty with head exchange
LT02	± 1 °C or ± 1 % of reading	± 1.5 °C or ± 1 % of reading
LT15	± 1 °C or ± 1 % of reading	± 1.5 °C or ± 1 % of reading
LT22	± 1 °C or ± 1 % of reading	± 1.5 °C or ± 1 % of reading
LT02H	± 1.5 °C or ± 1 % of reading	± 2.0 °C or ± 1 % of reading
LT10H	± 1.5 °C or ± 1 % of reading	± 2.0 °C or ± 1 % of reading
LT02F	± 2.0 °C or ± 1 % of reading	± 3.0 °C or ± 1 % of reading
LT15F	± 2.0 °C or ± 1 % of reading	± 3.0 °C or ± 1 % of reading
LT25F	± 2.0 °C or ± 1 % of reading	± 3.0 °C or ± 1 % of reading
G5H	± (1.5 °C + 1 % of reading)	± (2.2 °C + 1 % of reading)
G5L	± (1.5 °C + 1 % of reading)	± (2.2 °C + 1 % of reading)

P3	± 2.5 °C or ± 1 % of reading	± 3.3 °C or ± 1 % of reading
P7	± 1.5 °C or ± 1 % of reading	± 2.0 °C or ± 1 % of reading
1MXL	± 2.0 °C	± 2.5 °C
1ML	± (1.5 °C + 0.3 % of reading)	± (2.0 °C + 0.3 % of reading)
1MH	± (1.5 °C + 0.3 % of reading)	± (2.0 °C + 0.3 % of reading)
1MH1	± (2.0 °C + 0.3 % of reading)	± (2.5 °C + 0.3 % of reading)
2MXL	± 1.5 °C	± 2.0 °C
2ML	± (1.5 °C + 0.3 % of reading)	± (2.0 °C + 0.3 % of reading)
2MH	± (1.5 °C + 0.3 % of reading)	± (2.0 °C + 0.3 % of reading)
2MH1	± (1.5 °C + 0.3 % of reading)	± (2.0 °C + 0.3 % of reading)
3MXL	± 1.5 °C	± 2.0 °C
3ML	± 1.5 °C	± 2.0 °C
3MH	± 1.5 °C	± 2.0 °C
3MH1	± (1.5 °C + 0.3 % of reading)	± (2.0 °C + 0.3 % of reading)
3MH2	± (1.5 °C + 0.3 % of reading)	± (2.0 °C + 0.3 % of reading)
4M	± (2.0 °C + 0.3 % of reading)	± (2.0 °C + 0.3 % of reading)

5 Outputs and Inputs

5.1 Analog Outputs

The two analog outputs – OUT-1 and OUT-2 of the CTi are freely selectable. There is the possibility to choose between different Output channels, see **5.1.1**.

5.1.1 Output channels

The outputs can be used for the object temperature, internal temperature (head) and temperature of the electronic box. The selection of the output signal is done via software.

Output signal	Range	Connection pin on CTi board
Voltage	0 ... (5)10 V	OUT-1 or OUT-2
Current	0 (4) ... 20 mA	OUT-1 or OUT-2
Thermocouple	TC K	OUT-1 or OUT-2
Alarm Voltage	On/Off scalable	OUT-1 or OUT-2
Alarm Current	On/Off scalable	OUT-1 or OUT-2

5.2 Digital Interfaces

CTi sensors can be optionally equipped with an IP67 USB-, RS232-, RS485-, Modbus RTU, Modbus TCP, Ethernet TCP, Profinet, or EtherNet/IP interface.

If you want to install an interface, plug the interface board into the place provided, which is located beside the display (see picture below). In the correct position the holes of the interface match with the thread holes of the electronic box. Now press the board down to connect it and use both M3x5 screws for fixing it. Plug the preassembled interface cable with the terminal block into the male connector of the interface board.

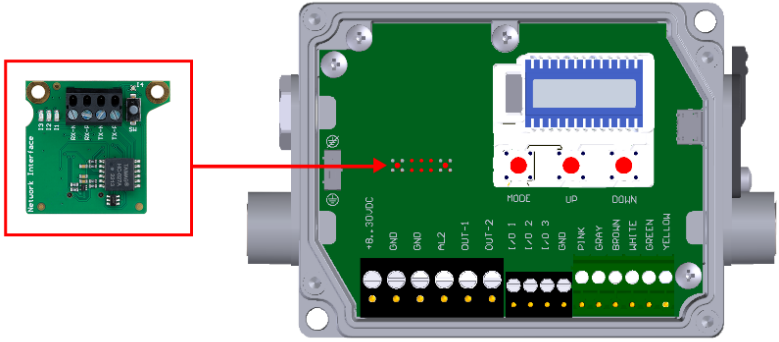

The digital communication with the interface board will be interrupted while build-in USB cable is connected to the PC. The communication will be established again after unplugging the built-in USB cable.

5.3 Relay Outputs

The CTi can be optionally equipped with a relay output. The relay board will be installed the same way as the digital interfaces. S**imultaneous installation of the digital interface and the relay outputs is not possible.**
The relay board provides two fully isolated switches, which have the capability to switch
max. 60 VDC/ 42 VAC_{RMS}, 0,4 A DC/AC. A red LED shows the closed switch.

The switching thresholds are in accordance with the values for alarm 1 and 2 [►**5.5 Alarms**].
The alarm values are set according to the ►**1.6 Factory Default Settings**.
To make advanced settings (change of low- and high alarm) a digital interface (USB, RS232) and the software is needed.

5.4 I/O pins

The CTi has three digital pins which can be programmed as outputs (digital) or as inputs (digital or analog) using the CompactPlus Connect software. The following functions are available:

Function	I/O pin acts as	Description
Alarm	Output digital	Open collector output/ definition as High- or Low alarm via norm. open/ norm. close options in software dialog.
Valid Low	Input digital	The output follows the object temperature as long as there is a Low level at the I/O pin. After discontinuation of the Low level the last value will be held.
Valid High	Input digital	The output follows the object temperature as long as there is a High level at the I/O pin. After discontinuation of the High level the last value will be held.
Hold Low-High	Input digital	The last value will be held if there is a signal with a rising edge on the I/O pin.
Hold High-Low	Input digital	The last value will be held if there is a signal with a falling edge on the I/O pin.
Hold Reset Low	Input digital	Reset of Peak or valley hold (High-Low signal)
Hold Reset High	Input digital	Reset of Peak or valley hold (Low-High signal)
Emissivity external	Input analog	The emissivity value can be adjusted via a 0-10 V signal on the I/O pin (scaling possible via software).
Uncommitted value	Input analog	Display of an uncommitted value
Laser on Low	Input digital	Turning on the laser (Low signal)
Laser on High	Input digital	Turning on the laser (High signal)
External Ambient Compensation	Input analog	The ambient temperature will be determined by a voltage on the I/O-pin [0–10 V; range scalable].
External Transmitted Radiation	Input analog	The transmitted ambient temperature will be determined by a voltage on the I/O-pin [0–10 V; range scalable].

***Low/High-level: via software**

5.5 Alarms

The CTi has the different Alarm features.

All alarms (alarm 1, alarm 2, output channel 1 and 2 if used as alarm output) have a fixed **hysterese of 2 K.**

5.5.1 Visual Alarms

These alarms will cause a change of the color of the LCD display and will also change the status of the optional relays interface. In addition, the Alarm 2 can be used as open collector output at pin **AL2** on the mainboard **[24 V/ 50 mA]**.

For extended setup like definition as low or high alarm **[via change of normally open/ closed]**, selection of the signal source **[T_{Proc}, T_{Head}, T_{Box}]** in the software CompactPlus Connect is needed. The visual alarms are independent of the alarm settings. In the CompactPlus Connect software these can be defined as desired.

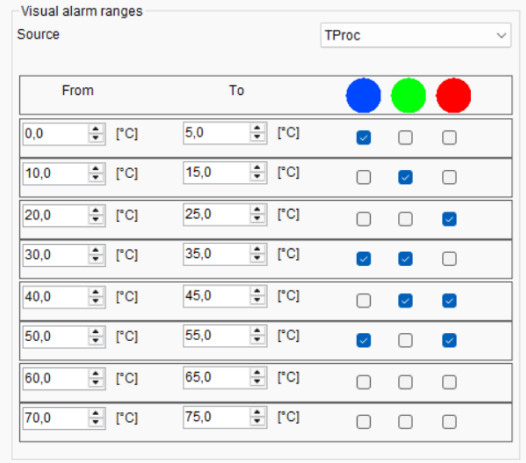

5.5.2 Open collector output / AL2:

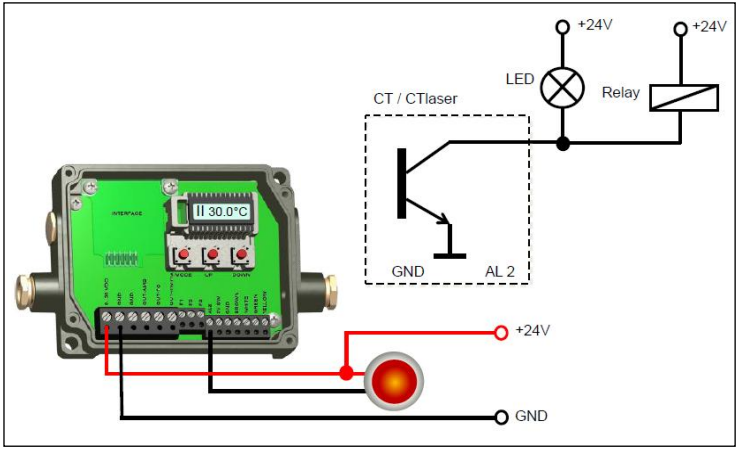

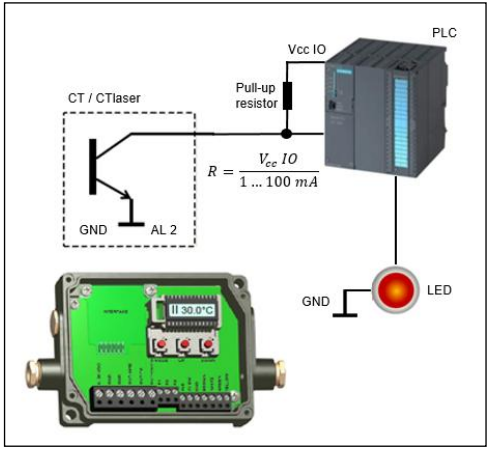

- The transistor acts as a switch. In case of alarm, the contact is closed.
- A load/consumer (Relay, LED or a resistor) must always be connected.
- The alarm voltage (here 24 V) must not be connected directly to the alarm output (short circuit).

6 Operating

After power up the unit the sensor starts an initializing routine for some seconds. During this time the display will show **INIT**. After this procedure the object temperature is shown in the display. The display backlight color changes according to the alarm settings **[►5.5 Alarms]**.

6.1 Sensor Setup

The programming keys **Mode**, **Up** and **Down** enable the user to set the sensor on-site. The current measuring value or the chosen feature is displayed. With **Mode** the operator obtains the chosen feature, with **Up** and **Down** the functional parameters can be selected **– a change of parameters will have immediate effect.** If no key is pressed for more than 10 seconds, the display automatically shows the calculated object temperature (according to the signal processing). From firmware version 1015 (or 33 for all CTi xM devices) onwards, it is possible to also configure the output channel.

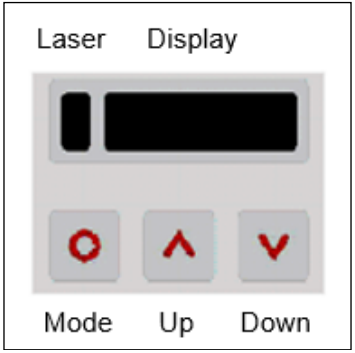

Pressing the Mode button again recalls the last called function on the display. The signal processing features **Peak hold** and **Valley hold** cannot be selected simultaneously.

Factory Default Setting
To set the CTi back to the factory default settings, please press at first the **Down**-key and then the **Mode**-key and keep both pressed for approx. 3 seconds.
The display will show **RESET** for confirmation.

Display	Mode [Sample]	Display
Abbreviations are explained in the table following this one.		
TPROC 320.9	Process temperature (after signal processing) [320,9 °C]	fixed
T AVG 320.5	Average temperature [320.5°C]	fixed
T INT 50.1	Detector Temperature [50.1 °C]	fixed
T BOX 38.6	Electronic box Temperature [38.6 °C]	fixed
EMISS 1.000	Emissivity [1.000]	**0.050 ... 1.100**
TRANS 1.000	Transmission [1.000]	**0.050... 1.100**
AVG 0.020	Signal output Average [0.020 s]	**AVG 0.000** = inactive/ **0.1 … 65** s
HOLD **H TIM** **H TH** **H HY**	OFF PEAK/ VALL APEAK/ AVALL APEAK/ AVALL	**OFF/ PEAK/ VALL/ APEAK/ AVALL** **0…65 s** (65 = infinity) Threshold value [°C/°F] Hysteresis setting in °C/°F
O1 MD *)	Analog and alarm output **OFF** **MA** - 0 – 20 mA output **MV** - 0 – 10 mV output **AL MA** - Alarm in mA **AL MV** - Alarm in mV **TCK** - Thermocouple	 **MA / MV / AL MA / AL MV / TCK** **SOURC / T MIN / TMAX / MA.MIN / MA.MAX** **SOURC / T MIN / TMAX / V.MIN / V.MAX** **AL TH** (Alarm Threshold) / **AL HY** (Alarm Hystersis) / **MA.NAL** (No Alarm Value) / **MA.AL** (Alarm Value) / **Mode** **AL TH** (Alarm Threshold) / **AL HY** (Alarm Hystersis) / **V NAL** (No Alarm Value) / **V AL** (Alarm Value) / **Mode** **SOURC**

O2 MD *)	Analog and alarm output **OFF** **MA** - 0 – 20 mA output **MV** - 0 – 10 mV output **AL MA** - Alarm in mA **AL MV** - Alarm in mV **TCK** - Thermocouple	 **MA / MV / AL MA / AL MV / TCK** **SOURC / T MIN / TMAX / MA.MIN / MA.MAX** **SOURC / T MIN / TMAX / V.MIN / V.MAX** **AL TH** (Alarm Threshold) / **AL HY** (Alarm Hystersis) / **MA.NAL** (No Alarm Value) / **MA.AL** (Alarm Value) / **Mode** **AL TH** (Alarm Threshold) / **AL HY** (Alarm Hystersis) / **V NAL** (No Alarm Value) / **V AL** (Alarm Value) / **Mode** **SOURC**
U °C	Temperature unit [°C]	**°C/ °F**
S ON	Laser Sighting	**ON/ OFF**
BAUD 115.2K	Baud rate in kBaud [115]	**115.2 / 921.6 kBaud**
M 01	Multidrop address [1] (only with RS485 interface) RS422 mode	**01 … 32** **RS422** (Press Down M01 button)

*) If the option of analog output does not appear in the menu, ensure a firmway update. Available from Firmware version 1015, or >33 for CTi xM devices.

EMISS 1.000 Setup of **Emissivity**. Pressing **Up** increases the value, **Down** decreases the value (also valid for all further functions). The emissivity is a material constant factor to describe the ability of the body to emit infrared energy **[►10 Emissivity]**.

TRANS 1.000 Setup of **Transmissivity**. This function is used if an optical component (protective window, additional optics e.g.) is mounted between sensor and object. The standard setting is 1.000 = 100 % (if no protective window etc. is used).

AVG 0.020 Setup of **Average time**. In this mode an arithmetic algorithm will be performed to smoothen the signal. The set time is the time constant. This function can be combined with all other post processing functions. The shortest value is 0.001 s. If the value is set to **0.0** the function is deactivated.

HOLD Setup of **signal processing**. By pressing `Up` or `Down` the mode can be selected.

PEAK: Setup of **Peak hold**. In this mode the sensor is waiting for descending signals. If the signal descends the algorithm maintains the previous signal peak for the specified time.
After the hold time the signal will drop down to the second highest value or will descend by 1/8 of the difference between the previous peak and the minimum value during the hold time. This value will be held again for the specified time. After this the signal will drop down with slow time constant and will follow the current object temperature.
If the value is set to **0.0** the display will show **---** (function deactivated).

VALL: Setup of **Valley hold**. In this mode the sensor waits for ascending signals. The definition of the algorithm is according to the peak hold algorithm (inverted).
If the value is set to **0.0** the function deactivated.

APEAK (Advanced Peak Hold): In this mode the sensor waits for local peak values. Peak values which are lower than their predecessors will only be taken over if the temperature has fallen below the **Threshold** value beforehand. If **Hysteresis** is activated a peak in

addition must decrease by the value of the hysteresis before the algorithm takes it as a new peak value.

AVALL (Advanced Valley Hold): This mode is the inverted function of Advanced Peak hold. The sensor waits for local minima. Minimum values which are higher than their predecessors will only be taken over if the temperature has exceeded the **Threshold** value beforehand. If **Hysteresis** is activated a minima in addition must increase by the value of the hysteresis before the algorithm takes it as a new minimum value.

O1 MD (Output mode)
O2 MD (Output mode)

Please also refer to the schematic overview below.

Choose whether the output mode is activated (**MA / MV / AL MA / AL MV / TCK**) or deactivated (**OFF**). Choose between 0-20 mA (**MA**) or 0-10 V (**MV**) analog output mode, the alarm output in mA (**AL MA**) or V (**AL MV**), and the thermocouple (**TCK**) output.

For MA and MV, choose for the source (**SOURC** → **PROC, HEAD or BOX**). Set the minimum (**T MIN**) and maximum (**T MAX**) temperature values, and the minimum (**MA/V MIN**) and maximum (**MA/V MAX**) output values.

For AL MA and AL MV, set the source (**SOURC**) to (**PROC, HEAD or BOX**), the alarm threshold (**AL TH**), the alarm Hysteresis (**AL HY**), the no alarm value (**MA/V NAL**) and the alarm value (**MA/V AL**). Set **MODE** to normally open (**N OP**) or normally closed (**N CL**).

The thermocouple output only selects the source (**SOURC** → **PROC, HEAD or BOX**).

U °C

Setup of the **Temperature unit** [°C or °F].

S OFF

Activating (**ON**) and Deactivating (**OFF**) of an optional **Sighting Laser [►0**

Further Accessories**]**. By pressing **Up** or **Down** a voltage of 3 VDC will be switched to the **PINK** connection pin on the mainboard.

BAUD 115.2 K Setup of the **Baud rate** for digital data transfer.

M 01 Setup of the **Multidrop address**. In a **RS485** network each sensor will need a specific address. This menu item will only be shown if a RS485 interface board is plugged in. For using the **RS422** mode, press once the down button on M01.

Schematic output menu for mA/V and alarm output:

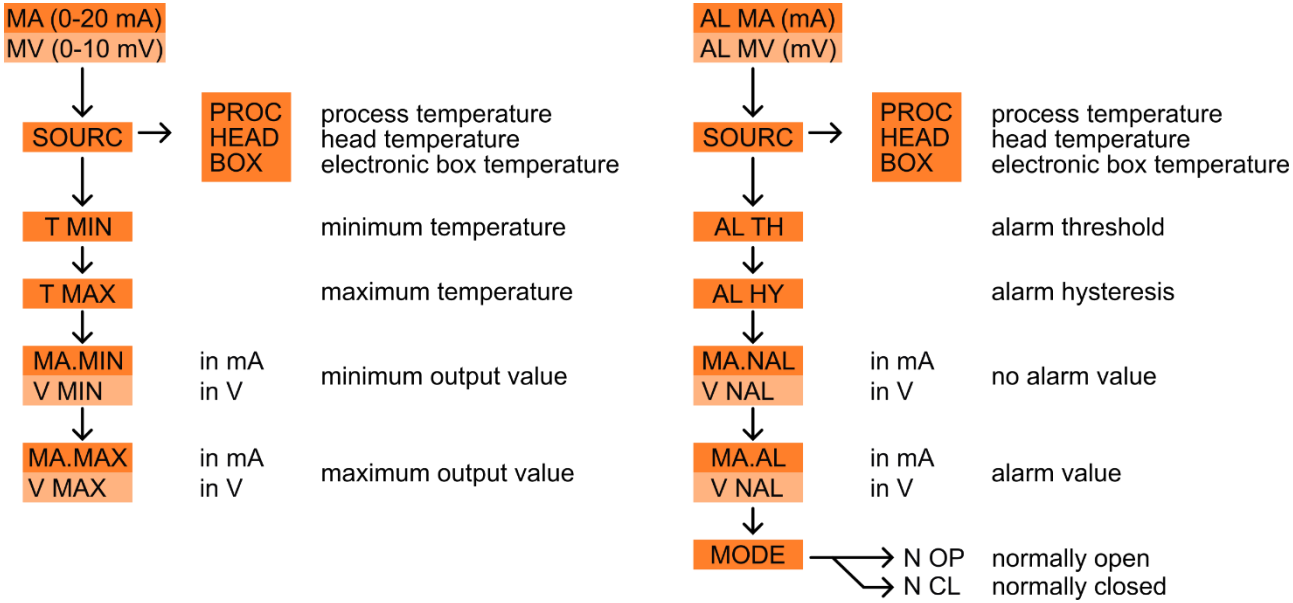

Peak picking function

To detect fast hotspots (detection time 110 µs), the averaging time must be set to 0.0 s.

You can display the process temperature T_{Proc} (with post processing) and the current average temperature T_{Avg} (without any post processing) in the diagram. This allows for easy tracking and control of the results and functionality of the selected post-processing features.

Signal Graphs

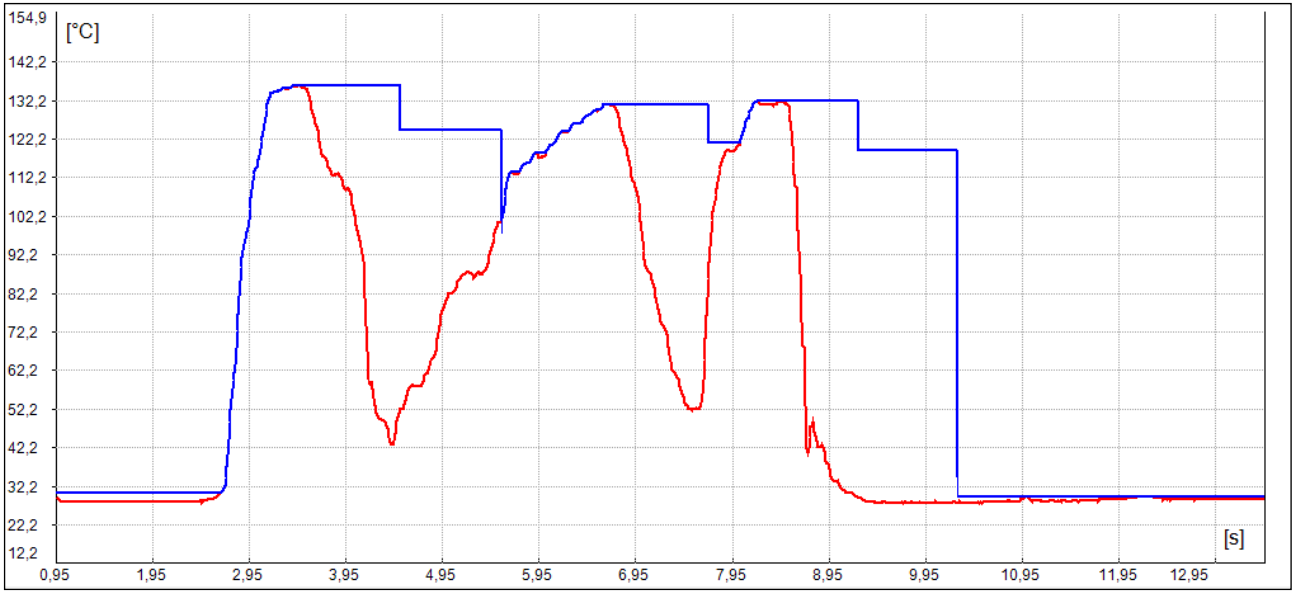

— T_{Proc} with Peak Hold (Hold time = 1s)
— T_{Avg} without post processing

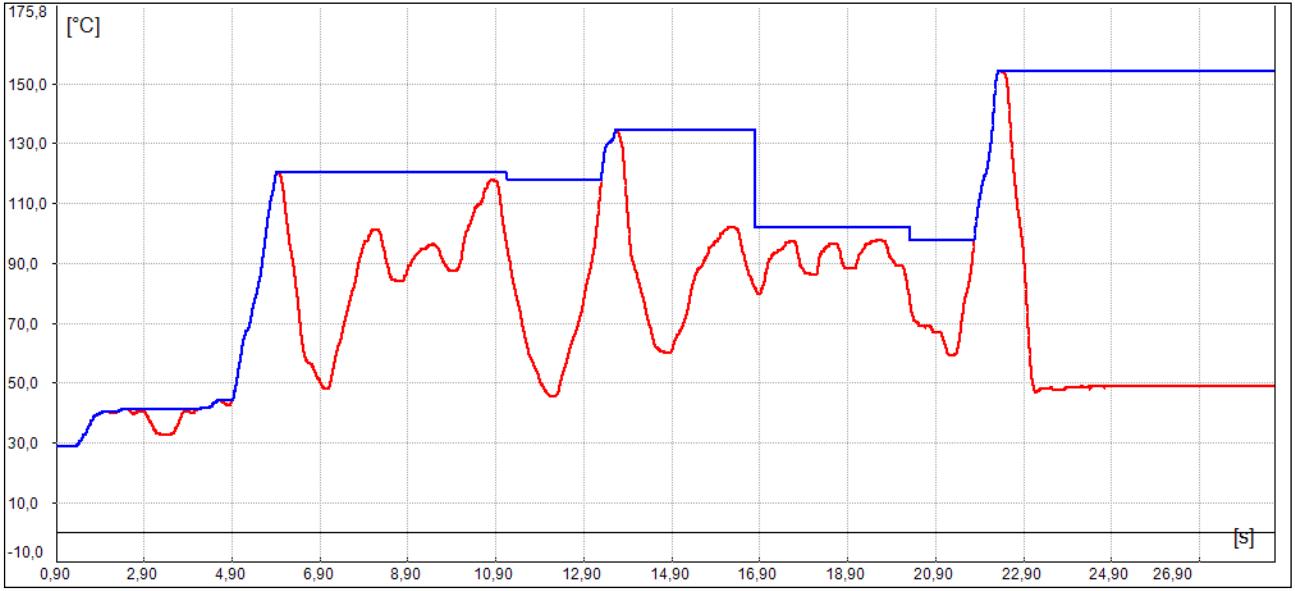

— T_{Proc} with Advanced peak hold (Threshold = 80 °C/ Hysteresis = 20 °C)
— T_{Avg} without post processing

7 IRmobile App

The CTi sensor has a direct connection to an Android smartphone or tablet. All you have to do is download the IRmobile app for free in the Google Play store. This can also be done via the QR code. The supplied USB cable can be directly used.

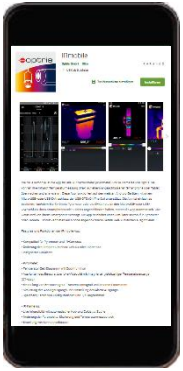

With IRmobile it is possible to monitor and analyze the infrared temperature measurement on a connected smartphone or tablet. This app runs on most Android devices running on 5.0 or higher with a micro USB or USB-C port supporting USB-OTG (On The Go). It is easy to operate. After plugging your CTi device to your phone or tablet, the app will start automatically. The device is powered by your phone. Different digital temperature values can be displayed in the temperature time diagram. One can easily zoom in the diagram to see more details and small signal changes.

IRmobile app features:

- Temperature time diagram with zoom function
- Digital temperature values
- Setup of emissivity, transmissivity and other parameters
- Scaling of the analog output and setting of the alarm output
- Change of temperature unit: Celsius or Fahrenheit
- Saving/loading of configurations and T/t diagrams
- Restore factory default sensor settings
- Integrated simulator

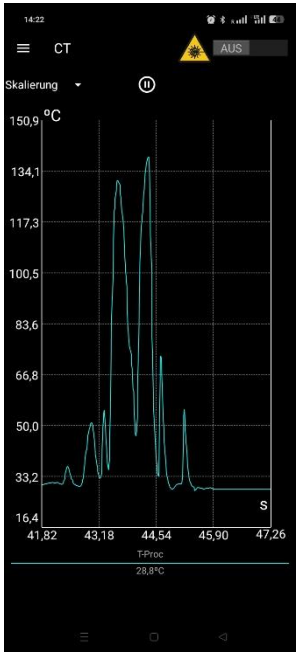

Supported for:

- Optris pyrometers: Compact series, high performance series and video thermometers
- Optris IR cameras: PI and Xi series
- For android devices running 5.0 or higher with a micro USB or USB-C port supporting USB-OTG (On The Go)

8 Software CompactPlus Connect

8.1 Installation

The software can be downloaded under https://optris.com/software/compactplus-connect/. Unzip and open the program and start the **Setup.exe**. Follow the instructions of the wizard until the installation is finished.

Minimum system requirements:

- Windows 8, 10, 11
- USB interface
- Hard disc with at least 60 MByte free space
- At least 128 MByte RAM

The installation wizard will place a launch icon on the desktop and on the start menu:
[Start]\Programs\CompactPlus Connect.
If you want to uninstall the software from your system, please use the **uninstall icon** in the start menu.

- A detailed description is provided on the downloaded software package.
- Software CompactPlus Connect

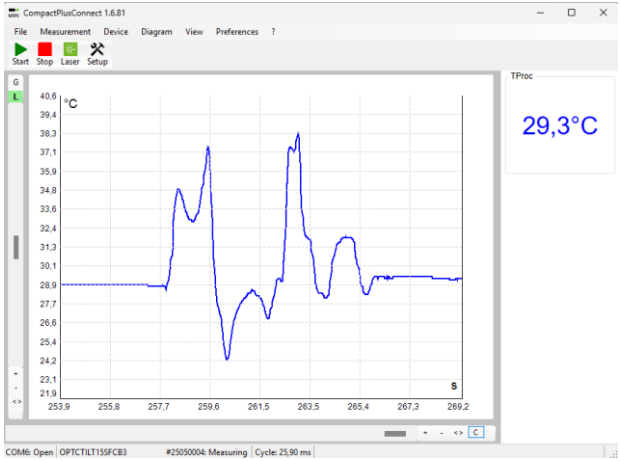

Main Features:

- Graphic display for temperature trends and automatic data logging for analysis and documentation
- Complete sensor setup and remote controlling
- Adjustment of signal processing functions
- Programming of outputs and functional inputs

8.2 Communication settings

8.2.1 Serial Interface

Baudrate:	115.2 or 921.6 kBaud (adjustable on the unit or via software)		
Data bits:	8	Stop bits:	1
Parity:	none	Flow controll:	off

8.2.2 Protocol

All sensors of the CTi series use a binary protocol. To get a fast communication the protocol has no additional overhead with CR, LR or ACK bytes.

9 Basics of Infrared Thermometry

Depending on the temperature each object emits a certain amount of infrared radiation. A change in the temperature of the object is accompanied by a change in the intensity of the radiation. For the measurement of “thermal radiation” infrared thermometry uses a wavelength ranging between 1 µm and 20 µm.
The intensity of the emitted radiation depends on the material. This material contingent constant is described with the help of the emissivity which is a known value for most materials (►**10 Emissivity**).

Infrared thermometers are optoelectronic sensors. They calculate the surface temperature based on the emitted infrared radiation from an object. The most important feature of infrared thermometers is that they enable the user to measure objects contactless. Consequently, these products help to measure the temperature of inaccessible or moving objects without difficulties. Infrared thermometers basically consist of the following components:

- lens
- spectral filter
- detector
- electronics (amplifier/ linearization/ signal processing)

The specifications of the lens decisively determine the optical path of the infrared thermometer, which is characterized by the ratio Distance to Spot size.
The spectral filter selects the wavelength range, which is relevant for the temperature measurement. The detector in cooperation with the processing electronics transforms the emitted infrared radiation into electrical signals.

10 Emissivity

10.1 Definition

The intensity of infrared radiation, which is emitted by each body, depends on the temperature as well as on the radiation features of the surface material of the measuring object. The emissivity (ε – Epsilon) is used as a material constant factor to describe the ability of the body to emit infrared energy. It can range between 0 and 100 %. A “blackbody” is the ideal radiation source with an emissivity of 1,0 whereas a mirror shows an emissivity of 0,1.
If the emissivity chosen is too high, the infrared thermometer may display a temperature value which is much lower than the real temperature – assuming the measuring object is warmer than its surroundings. A low emissivity (reflective surfaces) carries the risk of inaccurate measuring results by interfering infrared radiation emitted by background objects (flames, heating systems, chamottes). To minimize measuring errors in such cases, the handling should be performed very carefully, and the unit should be protected against reflecting radiation sources.

10.2 Determination of unknown Emissivity

► First, determine the actual temperature of the measuring object with a thermocouple or contact sensor. Second, measure the temperature with the infrared thermometer and modify the emissivity until the displayed result corresponds to the actual temperature.

► If you monitor temperatures of up to 380 °C you may place a special plastic sticker (emissivity dots – part number: ACLSED) onto the measuring object, which covers it completely. Now set the emissivity to 0,95

and take the temperature of the sticker. Afterwards, determine the temperature of the adjacent area on the measuring object and adjust the emissivity according to the value of the temperature of the sticker.

► Cove a part of the surface of the measuring object with a black, flat paint with an emissivity of 0,98. Adjust the emissivity of your infrared thermometer to 0,98 and take the temperature of the coloured surface. Afterwards, determine the temperature of a directly adjacent area and modify the emissivity until the measured value corresponds to the temperature of the coloured surface.

CAUTION: On all three methods the object temperature must be different from ambient temperature.

10.3 Characteristic Emissivity

In case none of the methods mentioned above help to determine the emissivity you may use the emissivity tables ►**Appendix A – Table of Emissivity for metals** and **Appendix B – Table of Emissivity for non-metals**. These are average values, only. The actual emissivity of a material depends on the following factors:

- temperature
- measuring angle
- geometry of the surface
- thickness of the material
- constitution of the surface (polished, oxidized, rough, sandblast)
- spectral range of the measurement
- transmissivity (e.g. with thin films)

Appendix A – Table of Emissivity for metals

Material		typical Emissivity			
Spectral response		**1,0 µm**	**1,6 µm**	**5,1 µm**	**8-14 µm**
Aluminium	non oxidized	0,1-0,2	0,02-0,2	0,02-0,2	0,02-0,1
	polished	0,1-0,2	0,02-0,1	0,02-0,1	0,02-0,1
	roughened	0,2-0,8	0,2-0,6	0,1-0,4	0,1-0,3
	oxidized	0,4	0,4	0,2-0,4	0,2-0,4
Brass	polished	0,35	0,01-0,05	0,01-0,05	0,01-0,05
	roughened	0,65	0,4	0,3	0,3
	oxidized	0,6	0,6	0,5	0,5
Copper	polished	0,05	0,03	0,03	0,03
	roughened	0,05-0,2	0,05-0,2	0,05-0,15	0,05-0,1
	oxidized	0,2-0,8	0,2-0,9	0,5-0,8	0,4-0,8
Chrome		0,4	0,4	0,03-0,3	0,02-0,2
Gold		0,3	0,01-0,1	0,01-0,1	0,01-0,1
Haynes	alloy	0,5-0,9	0,6-0,9	0,3-0,8	0,3-0,8
Inconel	electro polished	0,2-0,5	0,25	0,15	0,15
	sandblast	0,3-0,4	0,3-0,6	0,3-0,6	0,3-0,6
	oxidized	0,4-0,9	0,6-0,9	0,6-0,9	0,7-0,95
Iron	non oxidized	0,35	0,1-0,3	0,05-0,25	0,05-0,2
	rusted		0,6-0,9	0,5-0,8	0,5-0,7
	oxidized	0,7-0,9	0,5-0,9	0,6-0,9	0,5-0,9
	forged, blunt	0,9	0,9	0,9	0,9
	molten	0,35	0,4-0,6		
Iron, casted	non oxidized	0,35	0,3	0,25	0,2
	oxidized	0,9	0,7-0,9	0,65-0,95	0,6-0,95

Material		typical Emissivity			
Spectral response		**1,0 µm**	**1,6 µm**	**5,1 µm**	**8-14 µm**
Lead	polished	0,35	0,05-0,2	0,05-0,2	0,05-0,1
	roughened	0,65	0,6	0,4	0,4
	oxidized		0,3-0,7	0,2-0,7	0,2-0,6
Magnesium		0,3-0,8	0,05-0,3	0,03-0,15	0,02-0,1
Mercury			0,05-0,15	0,05-0,15	0,05-0,15
Molybdenum	non oxidized	0,25-0,35	0,1-0,3	0,1-0,15	0,1
	oxidized	0,5-0,9	0,4-0,9	0,3-0,7	0,2-0,6
Monel (Ni-Cu)		0,3	0,2-0,6	0,1-0,5	0,1-0,14
Nickel	electrolytic	0,2-0,4	0,1-0,3	0,1-0,15	0,05-0,15
	oxidized	0,8-0,9	0,4-0,7	0,3-0,6	0,2-0,5
Platinum	black		0,95	0,9	0,9
Silver		0,04	0,02	0,02	0,02
Steel	polished plate	0,35	0,25	0,1	0,1
	rustless	0,35	0,2-0,9	0,15-0,8	0,1-0,8
	heavy plate			0,5-0,7	0,4-0,6
	cold-rolled	0,8-0,9	0,8-0,9	0,8-0,9	0,7-0,9
	oxidized	0,8-0,9	0,8-0,9	0,7-0,9	0,7-0,9
Tin	non oxidized	0,25	0,1-0,3	0,05	0,05
Titanium	polished	0,5-0,75	0,3-0,5	0,1-0,3	0,05-0,2
	oxidized		0,6-0,8	0,5-0,7	0,5-0,6
Wolfram	polished	0,35-0,4	0,1-0,3	0,05-0,25	0,03-0,1
Zinc	polished	0,5	0,05	0,03	0,02
	oxidized	0,6	0,15	0,1	0,1

Appendix B – Table of Emissivity for non-metals

Material		typical Emissivity			
Spectral response		**1,0 µm**	**2,2 µm**	**5,1 µm**	**8-14 µm**
Asbestos		0,9	0,8	0,9	0,95
Asphalt				0,95	0,95
Basalt				0,7	0,7
Carbon	non oxidized		0,8-0,9	0,8-0,9	0,8-0,9
	graphite		0,8-0,9	0,7-0,9	0,7-0,8
Carborundum			0,95	0,9	0,9
Ceramic		0,4	0,8-0,95	0,8-0,95	0,95
Concrete		0,65	0,9	0,9	0,95
Glass	plate		0,2	0,98	0,85
	melt		0,4-0,9	0,9	
Grit				0,95	0,95
Gypsum				0,4-0,97	0,8-0,95
Ice					0,98
Limestone				0,4-0,98	0,98
Paint	non alkaline				0,9-0,95
Paper	any color			0,95	0,95
Plastic >50 µm	non transparent			0,95	0,95
Rubber				0,9	0,95
Sand				0,9	0,9
Snow					0,9
Soil					0,9-0,98
Textiles				0,95	0,95
Water					0,93
Wood	natural			0,9-0,95	0,9-0,95

Appendix C – Smart Averaging

The average function is generally used to smoothen the output signal. With the adjustable parameter time this function can be optimal adjusted to the respective application. One disadvantage of the average function is that fast temperature peaks which are caused by dynamic events are subjected to the same averaging time. Therefore, those peaks can only be seen with a delay on the signal output.

The function **Smart Averaging** eliminates this disadvantage by passing those fast events without averaging directly through to the signal output.

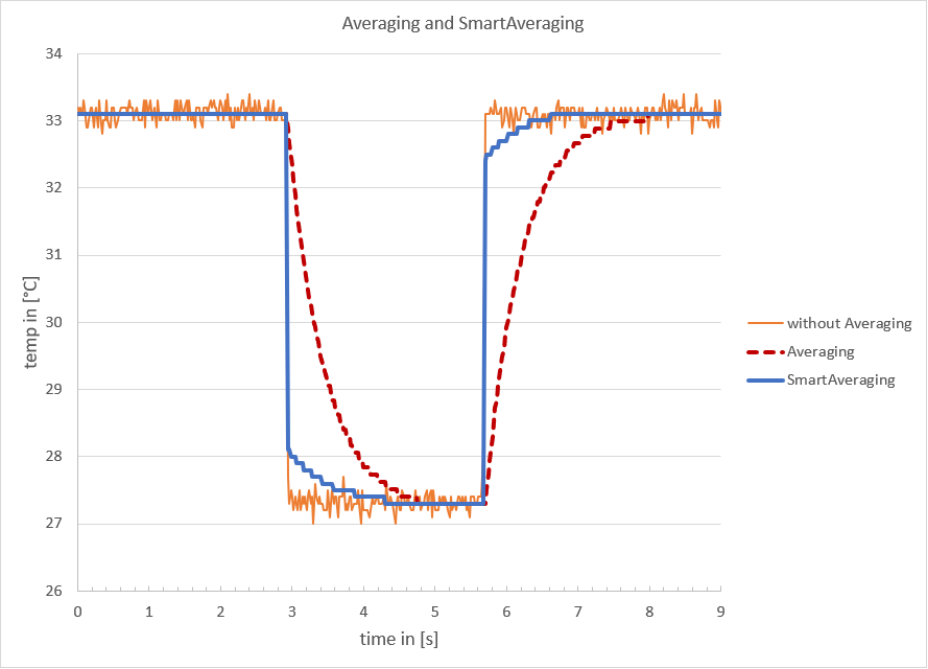

Appendix D – Declaration of Conformity

EG-Konformitätserklärung
EU Declaration of Conformity

Wir / We

Optris GmbH & Co. KG
Ferdinand Buisson Str. 14
D-13127 Berlin

erklären in alleiniger Verantwortung, dass / declare on our own responsibility that

die Produktserie optris CTi / the product group optris CTi

den Anforderungen der EMV-Richtlinie **2014/30/EU** und der Niederspannungsrichtlinie **2014/35/EU** entspricht.

meets the provisions of the EMC Directive **2014/30/EU** and the Low Voltage Directive **2014/35/EU**.

Angewandte harmonisierte Normen: / Applied harmonized standards:

EMV Anforderungen / EMC General Requirements:
EN 61326-1:2021 (Grundlegende Prüfanforderungen / Basic requirements)
EN 61326-2-3:2021

Gerätesicherheit von Messgeräten / Safety of measurement devices:
EN 61010-1:2010/A1:2019/AC:2019-04
EN 60825-1:2014 + AC:2017 + A11:2021 + A11:2021/AC:2022 (Lasersicherheit / Laser safety)

Beschränkung gefährlicher Stoffe / Restriction of hazardous substances:
EN IEC 63000:2018

Umgebungseinflüsse / Environmental testing
IEC 60068-2-27:2008 (Prüfung Ea und Leitfaden: Schocken / Test Ea and guidance: Shock)
IEC 60068-2-6:2008 (Schwingen, sinusförmig / Vibration (sinusoidal)
IEC 60068-2-64:2008 (Schwingen, Breitbandrauschen und Leitfaden / Vibration, broadband random and guidance)

Dieses Produkt erfüllt die Vorschriften der Richtlinie **2015/863/EU** (RoHS) des Europäischen Parlaments und des Rates vom 4. Juni 2015 zur Beschränkung der Verwendung bestimmter gefährlicher Stoffe in Elektro- und Elektronikgeräten.
This product is in conformity with Directive **2015/863/EU** (RoHS) of the European Parliament and of the Council of 4 June 2015 on the restriction of the use of certain hazardous substances in electrical and electronic equipment.

Berlin, 29.04.2025
Ort, Datum / place, date

Dr. Ulrich Kienitz
CEO

optris CTi-MA-E2026-08-A